Measurement and control

M.1

Analogue instruments

M.1

Analogue instruments

Analogue instruments

Analogue instruments

In many applications, such as control and distribution panels, it is important to control the installation quickly and visually, with no need to interpret data to detect the installation's status.

CIRCUTOR offers a solution to these needs with this range of products. Analogue indicators are essential to display an instantaneous electrical value with a needle that moves through a graduated scale.

M.1

Definition

The main operation of these instruments is provided by the type of measurement system used, either a ferromagnetic system to measure alternating current or a magneto-electric system to measure direct current. CIRCUTOR offers equipment for both systems. However, most systems are generally used to measure alternating current.

In general, analogue instruments are used because the interpretation of electrical parameters is quicker and more visual. Therefore, in this case the user simply looks at the position of the needle and does not have to interpret a number on a digital display.

FERROMAGNETIC OR MAGNETO-ELECTRIC

Electric current is directly translated by a measurement element that moves the needle. There are two types of measurement elements

Ferromagnetic (AC)

The ferromagnetic indicator is composed of a coil that transmits the current measured, with a fixed iron element and moving iron element in its centre, connected to the instrument's axis and needle. The set moves by the repulsion effect produced by the magnetic field between both iron elements and the arc depends on the current transmitted by

the coil. This system is used to measure AC and DC voltage and current between 15 and 100 Hz and it measures the root mean square of alternating current. It can not be used to measure rectified and unfiltered AC currents.**Magneto-electric (DC)**

The magneto-electric indicator is composed of a permanent central magnet, surrounded by a magnetic casing that guarantees the insensitivity to the exterior magnetic field and there is a moving coil between both, where the needle is fixed. Two spiral springs create the antagonistic pair to move the needle on the scale zero. This system is used to measure DC currents and voltages, measuring mean values.

Electrical and mechanical features

Insulation voltage

2 kV, 50 Hz, 1min between the mechanism and the box and between electrically insulated terminals.

Permanent overloads

Voltage circuits: 1.2 U_n

Current circuits: 1.2 I_n
(1.5 I_n for moving iron)

Short duration overloads

Voltage circuits:

2 U_n during 5 s

Current circuits:

5 I_n during 30 s

10 I_n during 5 s

40 I_n during 1 s

Relays

Contacts: NO / NC
Interrupting power: 230 V ac,
8 A / 30 V dc, 5 A resistive load

Factors that influence the Class

Assembly position

All instruments will be assembled in a vertical position. They can be supplied for vertical or horizontal assembly, on demand. The tolerance is ±5º.

Room temperature

The effects of temperature on the Class depend on the scope of the measurement. In general, instruments maintain their Class between +10 and +30ºC. This interval can be lower for particularly low measurement scopes. In these cases, the limit values are indicated on the scale.

The instruments can be adjusted for temperatures out of the interval mentioned above, on demand.Temperature limits Measurement instruments and their accessories support variations in temperature between -25 and +40 ºC (55 ºC in the tropicalized version) with no permanent defects.

Relative humidity

The Class is maintained within the 25 and 80 % non-condensing relative humidity interval.

Magnetic field

All instruments maintain their Class under the influence of an exterior magnetic field with a value of ≤ 0.5 MV.

Ferromagnetic support

The nature and thickness of the panel's plate does not affect the Class, with the exception of highly sensi-

tive instruments. In these cases, the scales are marked with the Fe symbol, followed by the plate's thickness.

Auxiliary power supply

The tolerance accepted for the nominal auxiliary power supply values is:

voltage: -15 ... +10 %
frequency: 45 ... 65 Hz

Vibrations

The instruments and their accessories support a minimum vibration with an amplitude of ±0.25 mm and a frequency of 50 cycles. Said vibration is equivalent to the application of an acceleration equal to 2.5 g to the three perpendicular axes during 20 minutes.

Degree of protection

Under normal operating conditions, the instrument boxes have an IP 52 protection degree and terminals have an IP 00 protection degree. Optionally, boxes are offered with an IP 54 or IP 55 protection degree and their terminals with an IP 20 protection degree.

Pointers

In accordance with DIN 43802.
With tube or blade pointers, on demand (Fig. 1)

Tropicalization (TROP)

Under TROP operation, and in accordance with the DIN 40040 Standard, the instruments are protected against corrosive environments and support temperatures between -25 and +55 ºC, with a non-condensing relative humidity of 95 %. Said humidity percentage is stated for a maximum temperature of 30 ºC and 30 days a year; during the rest of the year, the humidity must not exceed 75 %.Within this type of operation, the instruments can be adjusted for reference temperature values above 20 ºC. In these cases, the scales are marked with TROP, followed by the temperature value at which they are adjusted.

Chokes

The instruments and their accessories support five impacts, with an acceleration of 15 g, applied in the direction of the three perpendicular axes.

Zero correction

The regulation of adjustment lengths of the zero corrector on both sides of the resting position does not exceed ±2 % of the scale length.

Boxes

The boxes and frames of all instruments are made with self-extinguishing ABS material, in compliance with UL 94, and with a high resistance to impacts.

The box and frame dimensions comply with the DIN 43700 and DIN 43718 Standards, respectively. Bases are made with self-extinguishing reinforced PPO, in compliance with UL 94, with a high resistance to impacts and a maximum electrical insulation.

Standards

IEC 51, VDE 410, DIN 43780, BS 89, UL 94, EN 60051

Certificates

Lloyd's Register of Shipping (Ask for different types).

Scales

In accordance with the Standards:
DIN 43701 for scale end values.

DIN 43802 to assess divisions. The divisions and numbering of standardised scopes follow the examples on Fig.2 and 3.

The scale end values above 1000 are stated in thousands (k).

Product selection table

	System measurement	Fixing	Specifications	Type	Range	Size	Class	Scale angle	Scale extension
Ammeters	HM	Panel	Milliammeter	EC	100..0.600 mA	48 x 48, 72 x 72, 96 x 96, 144 x 144	1,5	90º	P2
			-	EC	5...100 A,.../5A				
				EZC	.../5A	72 x 72, 96 x 96		240º	
			With switch	EC FA	.../5A			90º	P1
			With relays	CEC	.../5A	96 x 96			
		DIN rail	-	EM 45	5...60 A, .../5A	85 x 52			P2
	BM	Panel	-	BC	5...60 A, .../60 mV	48 x 48, 72 x 72, 96 x 96, 144 x 144			P1
			With relays	CBC	.../60 mV	96 x 96			
		DIN rail	-	BM 45	5...60 A, .../60 mV	85 x 52			
Voltmeters	HM	Panel	-	EC	150 ... 600 V, .../110 V	48 x 48, 72 x 72, 96 x 96, 144 x 144	1,5	90º	P1
				EZC	250 V, 500 V	72 x 72, 96 x 96		240º	
			With switch	EC F	150 ... 600 V				
			With relays	CEC	150 ... 600 V, .../110 V	96 x 96		90º	
		DIN rail	-	EM 45	300 V, 500 V, .../110 V	85 x 52			
	BM	Panel	-	BC	0..0.600 V	48 x 48, 72 x 72, 96 x 96, 144 x 144			P2
			With relays	CBC	.../60 mV	96 x 96			P1
		DIN rail	-	BM45	15..0.150 V	85 x 52			
Process indicators	BM	Panel	-	BC	0...10 V, 0/4... 20 mA	48 x 48, 72 x 72, 96 x 96, 144 x 144	1,5	90º	P2
				ZC	0...10 V, 4... 20 mA, .../60 mV			240º	P1
		DIN rail		BM	0...10 V, 0/4... 20 mA	85 x 52		90º	
Power de-mand meters	-	Panel	Bimetallic	MC	... / 5 A				P1.2
			Bimetallic + HM	EMC					P2
	-	DIN rail	Bimetallic	MMC 45		85 x 52	3		P1.2
Reed	Pointer	Panel	-	HC	45...65 depending on the type	48 x 48, 72 x 72, 96 x 96, 144 x 144	0,5	90º	-
			-	HZC		96 x 96, 144 x 144		240º	
		DIN rail	-	HM		85 x 52		90	
	Reeds	Panel	-	HLC		72 x 72, 96 x 96, 144 x 144		-	
Watt-meter		Panel	Single-phase	WMC	400 V, .../5 A	96 x 96, 144 x 144	1,5	90º	P1
			Three-phase	WTC					
Varmeter		Panel	Single-phase	YMC	400 V, .../5 A	96 x 96, 144 x 144	1,5	90º	P1
			Three-phase	YTC					
Phase-meters	Electronic	Panel	Single-phase	FEMC	cos φ 0.5 - 1 - 0.5	96 x 96, 144 x 144	1,5	90º	P1
			Three-phase	FETC					
			Single-phase	FMZ				240º	
			Three-phase	FTZ					
	Induction		Single-phase	PIC	cos φ 0 - 1 - 0			90º	
			Three-phase	PIC	cos φ 0 - 1 - 0				

Moving iron ammeters (AC)

Moving-coil Ammeter

Analogue indicator to measure alternating current

Description

- No need for auxiliary power supply, only the CEC 96 type.
- DIN boxes with dimensions: 48, 72, 96 and 144.
- Precision class 1.5
- Measurement in true root mean square 100 mA ... 100 A
- Exchangeable scales for **EC48, EC72, EC96, EM 45, EC 72 FA, EC 96 FA**
- The alarm system can be fully configured for **CEC 96**

Application

In alternating current applications, to control the state of the current quickly and visually.

Features

	EC	EM	EZC	EC FA	CEC 96 with 2 relays
Auxiliary power supply					230 V ac
Consumption		-			2.5 V·A
Frequency		-			40 ... 90 Hz
Input circuit					
Consumption		0.3 ... 1.5 V·A			0.2 V·A
Frequency		20 ... 100 Hz			45 ... 65 Hz
Overloads		1.2 I_n permanent 5 I_n during 30 s 10 I_n during 5 s 40 I_n during 1 s			1.2 I_n permanent
Class		1.5 % FS			
Ambient conditions					
Operating temperature		+10 ... +30 ºC			+ 5 ... +55 ºC
Limit temperature		- 25 ... +40 ºC			-25 ... +70 ºC
Altitude		2000 m			
Build features					
Dimensions		See the following table			
Weight		See the following table			
Type of box	panel	DIN rail	panel	panel	panel
Degree of protection:					
Front panel		IP 52			IP 52
Terminals		IP 00			IP 20
Insulation voltage		2 kV, 50 Hz, 1 min, between the mechanism and the box			3 kV , 50 Hz, 1min
Standards		**BS 89, EN 60051, IEC 144, UL 94, DIN 43780, IEC 51, UNE 21318, CE**			**IEC 51, IEC 1010, IEC 529, IEC 255, IEC 278, IEC 414, IEC 144, LLOYD'S (TEST. ESP. No. 1)**

Moving iron ammeters (AC)

Moving iron ammeter

Analogue indicator to measure alternating current

References

	Ammeters, 90º				
Type	**EC 48**	**EC 72**	**EC 96**	**EC 144**	**EM 45**
Class	1,5				
Scale (mm)	90º , P2				
Dimensions (mm)					
a	48	72	96	144	85
b	48	72	96	144	52
c	66,2	49,2	49,2	71,8	65
Weight (g)	85	180	220	430	142
mA					
100	**M10111**	**M10121**	**M10131**	**M10142**	**M10151**
150	**M10112**	**M10122**	**M10132**	**M10142**	**M10152**
250	**M10114**	**M10124**	**M10134**	**M10144**	**M10154**
300	**M10115**	**M10125**	**M10135**	**M10145**	**M10155**
400	**M10116**	**M10126**	**M10136**	**M10146**	**M10156**
500	**M10117**	**M10127**	**M10137**	**M10147**	**M10157**
600	**M10118**	**M10128**	**M10138**	**M10148**	**M10158**
A					
5	**M10212**	**M10222**	**M10232**	**M10242**	**M10252**
10	**M10213**	**M10223**	**M10233**	**M10243**	**M10253**
15	**M10214**	**M10224**	**M10234**	**M10244**	**M10254**
20	**M10215**	**M10225**	**M10235**	**M10245**	**M10255**
25	**M10216**	**M10226**	**M10236**	**M10246**	**M10256**
30	**M10217**	**M10227**	**M10237**	**M10247**	**M10257**
40	**M10218**	**M10228**	**M10238**	**M10248**	**M10258**
50	**M10219**	**M10229**	**M10239**	**M10249**	**M10259**
60	**M1021A**	**M1022A**	**M1023A**	**M1024A**	**M1025A**
75	**-**	**M1022B**	**M1023B**	**M1024B**	**-**
100	**-**	**M1022C**	**M1023C**	**M1024C**	**-**
.../5 A (*)	**M10210**	**M10220**	**M10230**	**M10240**	**M10250**

*Scale is not included, except in **EC144** (equipment + scale included, indicate transformer ratio).

*For exchangeable scales, see Tables.

* .../1 A on demand

* Different settings, on demand.



	Ammeters, 240º		Ammeters with phase switch		Ammeters with 2 relays
Type	**EZC 72**	**EZC 96**	**EC 72 FA**	**EC 96 FA**	**CEC 96**
Accuracy class	1,5				
Scale (mm)	240º, P2		90º, P1		90º, P2
Dimensions (mm)					
a	72	96	72	96	96
b	72	96	72	96	96
c	49,2	49,2	49,2	49,2	85,3
Weight (g)	180	220	180	220	435
mA					
.../5 A (*)	**M10920**	**M10930**	**M10521**	**M10531**	**M14810**

*** EZC 72 / EZC96:**

Scale included, indicate the transformer ratio

.../1 A , on demand

Different settings, on demand

*** EC 72 FA / EC96 FA:**

Scale not included

Exchangeable scales (see tables)

.../1 A , on demand

Different settings, on demand

*** CEC 96:**

Scale included, indicate the transformer ratio

Exchangeable scales (see tables)

.../1 A , on demand

Moving iron ammeters (AC)

Moving iron ammeter

Analogue indicator to measure alternating current

References

Exchangeable scales, Moving Iron Ammeters

Type	SEC 48	SEC 72	SEC 96	SEM 45	SEC 72 FA	SEC 96 FA
Equipment	EC 48	EC 72	EC 96	EM 45	EC 72 FA	EC 96 FA
A						
5/5	M102Z2	M102Y2	M102X2	-	-	-
10/5	M102Z3	M102Y3	M102X3	-	-	-
15/5	M102Z4	M102Y4	M102X4	-	-	-
20/5	M102Z5	M102Y5	M102X5	-	-	-
25/5	M102Z6	M102Y6	M102X6	-	-	-
30/5	M102Z7	M102Y7	M102X7	-	-	-
40/5	M102Z8	M102Y8	M102X8	-	-	-
50/5	M102Z9	M102Y9	M102X9	M105X9	M105Y9	M105X9
60/5	M102ZA	M102YA	M102XA	M105XA	M105YA	M105XA
75/5	M102ZB	M102YB	M102XB	M102VB	M105YB	M105XB
100/5	M102ZC	M102YC	M102XC	M102VC	M105YC	M105XC
125/5	M102ZD	M102YD	M102XD	M102VD	M105YD	M105XD
150/5	M102ZE	M102YE	M102XE	M102VE	M105YE	M105XE
200/5	M102ZF	M102YF	M102XF	M102VF	M105YF	M105XF
250/5	M102ZG	M102YG	M102XG	M102VG	M105YG	M105XG
300/5	M102ZH	M102YH	M102XH	M102VH	M105YH	M105XH
400/5	M102ZJ	M102YJ	M102XJ	M102VJ	M105YJ	M105XJ
500/5	M102ZK	M102YK	M102XK	M102VK	M105YK	M105XK
600/5	M102ZL	M102YL	M102XL	M102VL	M105YL	M105XL
750/5	M102ZM	M102YM	M102XM	M102VM	M105YM	M105XM
800/5	M102ZN	M102YN	M102XN	M102VN	M105YN	M105XN
1 000/5	M102ZP	M102YP	M102XP	M102VP	M105YP	M105XP
1 200/5	M102ZQ	M102YQ	M102XQ	M102VQ	M105YQ	M105XQ
1 500/5	M102ZR	M102YR	M102XR	M102VR	M105YR	M105XR
2 000/5	M102ZS	M102YS	M102XS	M102VS	M105YS	M105XS
2 500/5	M102ZT	M102YT	M102XT	M102VT	M105YT	M105XT
3 000/5	M102ZU	M102YU	M102XU	M102VU	M105YU	M105XU
4 000/5	M102ZV	M102YV	M102XV	M102VV	M105YV	M105XV
5 000/5	M102ZW	M102YW	M102XW	M102VW	M105YW	M105XW

Moving iron ammeters (AC)

Moving iron ammeter

Analogue indicator to measure alternating current

Coding table

EC and EZC Ammeters

M	1	X	X	X	X	0	0	X	X	X

Code	Internal Code		
Setting	Standard 2P	0	
	1P	1	
	5P	6	
Current input	Standard (... / 5 A)		0
	... / 1 A		1
Scales (*)	1		1
	5		2
	10		3
	15		4
	20		5
	25		6
	30		7
	40		8
	50		9
	60		A
	75		B
	100		C
	125		D
	150		E
	200		F
	250		G
	300		H
	400		J
	500		K
	600		L
	750		M
	800		N
	1000		P
	1200		Q
	1500		R
	2000		S
	2500		T
	3000		U
	4000		V
	5000		W

EC and EM Milliammeters

M	1	X	X	X	X	0	0	X

Code	Internal Code	
Setting	Standard 2P	0
	1P	1
	5P	6

EC Scales and Ammeters and EM scales

M	1	X	X	X	X	0	0	X	X

Code	Internal Code		
Setting	Standard 2P	0	
	1P	1	
	5P	6	
Current input	Standard (.../ 5 A)		0
	... / 1 A		1

Ammeters and EC FA scales

M	1	X	X	X	X	0	0	X	X

Code	Internal Code		
Setting	Standard 1P	0	
	5P	6	
Current input	Standard (.../ 5 A)		0
	... / 1 A		1

CEC Ammeters

M	1	X	X	X	X	0	0	X	X

Code	Internal Code		
Scale	100	C	
	125	D	
	150	E	
	200	F	
	250	G	
	300	H	
	400	J	
	500	K	
	600	L	
	750	M	
	800	N	
	1000	P	
	1200	Q	
	2000	R	
	2500	S	
Current input	Standard (.../ 5 A)		0
	... / 1 A		1

Moving iron ammeters (AC)

Moving iron ammeter

Analogue indicator to measure alternating current

Dimensions

EC

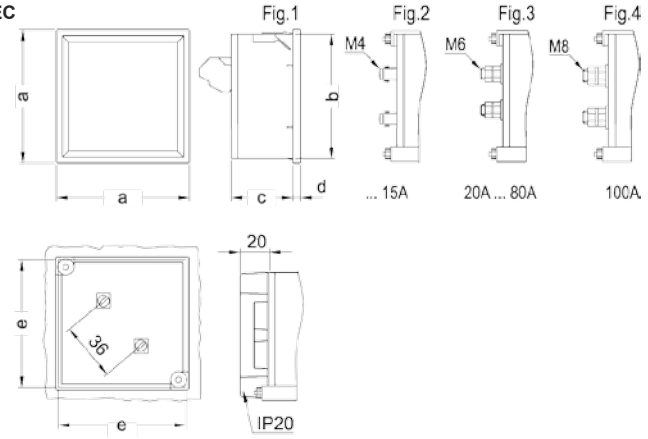

Type	Fig. EC	a	b	c	d	e
48 mm	1-3	48	44,7	61	5,2	45
72 mm	1-3-4	72	67,2	43,5	5,7	68
96 mm	1-3-4	96	91	43,5	5,7	92
144 mm	2-3-4	144	137	64,5	7,3	138

Dimensions (mm)

EZC

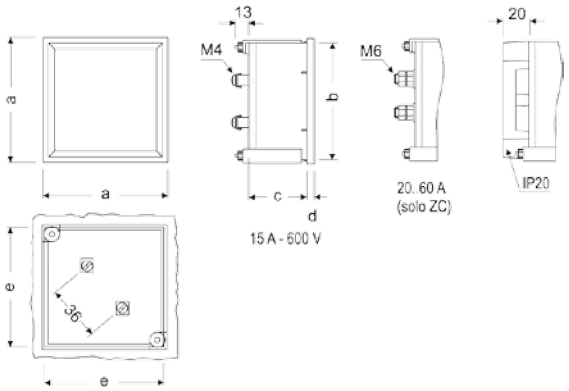

Type	Fig. EZC	a	b	c	d	e
72 mm	1	72	67,2	43,5	5,7	68
96 mm	1	96	91	43,5	5,7	92

Dimensions (mm)

EC-FA

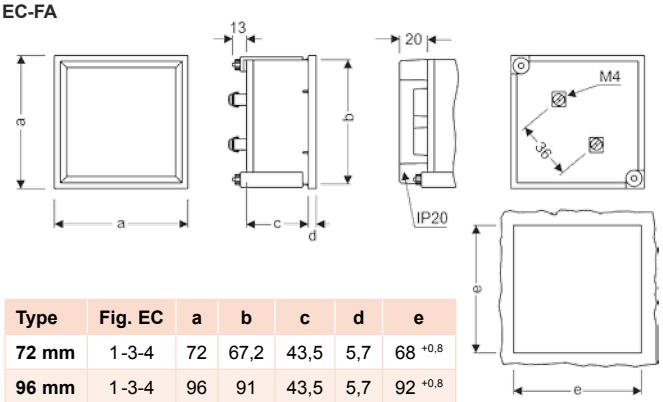

Type	Fig. EC	a	b	c	d	e
72 mm	1-3-4	72	67,2	43,5	5,7	68 +0,8
96 mm	1-3-4	96	91	43,5	5,7	92 +0,8

Dimensions (mm)

EM 45

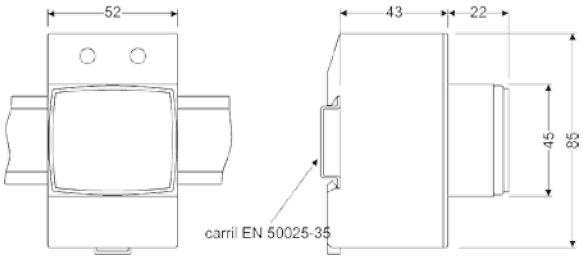

Connections

EC / EZC

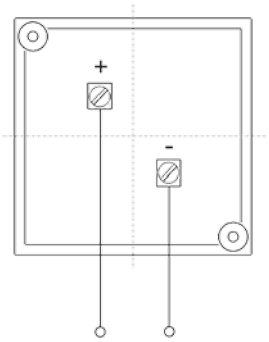

EC-FA

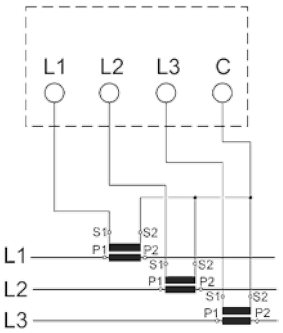

EM 45

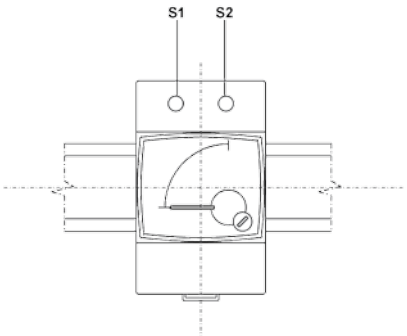

Moving iron voltmeters (AC)

Moving iron voltmeter

Analogue indicator to measure alternating current

Description

- No need for auxiliary power supply, only the **CEC 96** type
- DIN boxes with dimensions: 48, 72, 96 and 144
- Precision class 1.5
- Measurement in true root mean square or V ... 600 V ac
- Exchangeable scales for **EC48, EC72, EC96, EM 45**
- The alarm system can be fully configured for **CEC 96**

Application

In alternating current applications, to control the state of the voltage quickly and visually.

Features

	EC	EM	EZC	EC F	EC FN	CEC 96
Auxiliary power supply						230 V ac
Consumption		-				2.5 V·A
Frequency		-				40 ... 90 Hz
Input circuit						
Consumption		1 ... 4 V·A				0.2 V·A
Frequency		20 ... 100 Hz				45 ... 65 Hz
Overloads		1.5 U_n permanent 2 U_n during 5 s				1.2 U_n permanent
Class	1.5 % FS					
Ambient conditions						
Operating temperature		+10 ... +30 ºC				+ 5 ... +55 ºC
Limit temperature		- 25 ... +40 ºC				-25 ... +70 ºC
Altitude	2000 m					
Build features						
Dimensions	See the following table					
Weight	See the following table					
Type of box	panel	DIN rail	panel	panel	panel	panel
Degree of protection:						
Front panel		IP 52				IP 52
terminals		IP 00				IP 20
Insulation voltage	2 kV, 50 Hz, 1 min, between the mechanism and the box					3 kV , 50 Hz, 1min
Standards	**BS 89, EN 60051, IEC 144, UL 94, DIN 43780, IEC 51, UNE 21318, CE**					**IEC 51, IEC 1010, IEC 529, IEC 255, IEC 278, IEC 414, IEC 144, LLOYD'S (TEST. ESP. No. 1)**

Moving iron voltmeter (AC)

Moving iron voltmeter

Analogue indicator to measure alternating current

References

Voltmeters 90º, 240º and with 2 relays

	Voltmeters, 90º					Voltmeters, 240º		Voltmeters with 2 relays
								
Type	**EC 48**	**EC 72**	**EC 96**	**EC 144**	**EM 45**	**EZC 72**	**EZC 96**	**CEC 96**
Class	1,5					1,5		1,5
Scale	90º , P1					240º, P1		90º, P1
Dimensions (mm)								
 **a**	48	72	96	144	85	72	96	96
b	48	72	96	144	52	72	96	96
c	66,2	49,2	49,2	71,8	65	49,2	49,2	85,3
Weight (g)	85	180	220	430	142	180	220	435
V								
150	-	-	-	-	-	-	-	M14821
250	M10415	M10425	M10435	M10445	-	M11125	M11135	M14822
300	M10416	M10426	M10436	M10446	M10456	-	-	M14823
400	M10417	M10427	M10437	M10447	-	-	-	M14824
500	M10418	M10428	M10438	M10448	M10458	M11128	M11138	M14825
600	M10419	M10429	M10439	M10449	-	-	-	M14826
.../110 V(*)	M10410	M10420	M10430	M10440	M10450	-	-	M14820

*** EC48 / EC 72 / EC96 / EC144 EM45:**

*Scale not included, except in EC144
(equipment + scale included, indicate the transformer ratio)

*For exchangeable scales, see Tables.

*Different secondary voltages, on demand

*1P or 1.2P setting, on demand

*** EZC 72 / EZC96**

*Scale included, indicate the transformer ratio

*Different secondary voltages, on demand

*1P setting, on demand

*** CEC 96:**

Scale included, indicate the transformer ratio

Moving iron voltmeter (AC)

Moving iron voltmeter

Analogue indicator to measure alternating current

References

Voltmeters with phase switch

	Three-phase (3 wires)		Three-phase (4 wires)		With sequence-meter
Type	**EC 72 F III**	**EC 96 F III**	**EC 72 FIII +N**	**EC 96 F III *N**	**EC 96 FN-S**
Class	1,5				
Scale	90º , P1				
Dimensions (mm)					
a	72	96	72	96	96
b	72	96	72	96	96
c	49,2	49,2	49,2	49,2	49,2
Weight (g)	180	220	180	220	220
V					
250	M10625	M10635	M10725	M10735	-
300	M10626	M10636	M10726	M10736	-
400	M10627	M10637	M10727	M10737	-
500	M10628	M10638	M10728	M10738	M11038
600	M10629	M10639	M10729	M10739	-

* Voltage inputs through transformers, on demand

Exchangeable scales, Moving Iron Voltmeters

Type	**SEC 48**	**SEC 72**	**SEC 96**	**SEM 45**
Equipment	**EC 48**	**EC 72**	**EC 96**	**EM 45**
V				
1 000/110	M104Z1	M104Y1	M104X1	M104V1
3 300/110	M104Z2	M104Y2	M104X2	M104V2
6 600/110	M104Z3	M104Y3	M104X3	M104V3
13 200/110	M104Z4	M104Y4	M104X4	M104V4
15 000/110	M104Z5	M104Y5	M104X5	M104V5
20 000/110	M104Z6	M104Y6	M104X6	M104V6
22 000/110	M104Z7	M104Y7	M104X7	M104V7
25 000/110	M104Z8	M104Y8	M104X8	M104V8

* If the input of the unit requested is not .../110 V, indicate the ratio

Moving iron voltmeter (AC)

Moving iron voltmeter

Analogue indicator to measure alternating current

Coding table

EC Voltmeters through transformer and EZC

M	1	X	X	X	X	0	0	X	X	X
Code						Internal Code				
Setting			Standard 1.2P					0		
			1P					1		
Voltage input			Standard (.../110 V)						0	
			.../100 V						1	
			.../63.5 V						2	
			.../57.8 V						3	
Scales (for equipment with inputs through the transformer and all ECs)			1000							1
			3300							2
			6600							3
			13200							4
			15000							5
			20000							6
			22000							7
			25000							8

Direct EC and EC F voltmeters

M	1	X	X	X	X	0	0	X
Code						Internal Code		
Setting			Standard 1P					0
			1.2P					2

EC Scales and Voltmeter and EM scale

M	1	X	X	X	X	0	0	X	X
Code						Internal Code			
Setting			Standard 1.2P					0	
			1P					1	
Voltage input			Standard (.../110 V)						0
			.../100 V						1
			.../63.5 V						2
			.../57.8 V						3

Moving iron voltmeter (AC)

Moving iron voltmeter

Analogue indicator to measure alternating current

Dimensions

EC

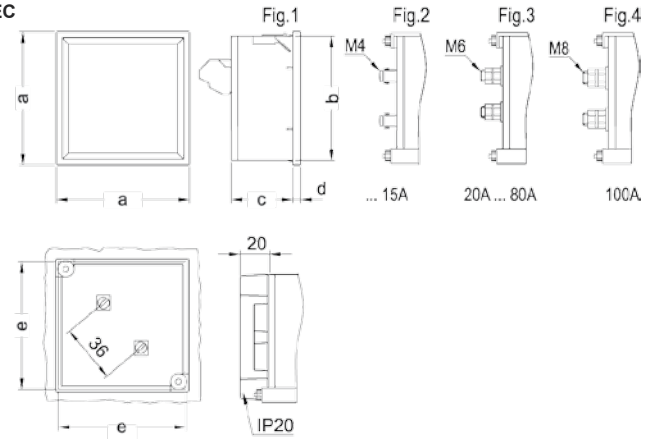

Type	Fig. EC	a	b	c	d	e
48 mm	1-3	48	44,7	61	5,2	45
72 mm	1-3-4	72	67,2	43,5	5,7	68
96 mm	1-3-4	96	91	43,5	5,7	92
144 mm	2-3-4	144	137	64,5	7,3	138

Dimensions (mm)

EZC

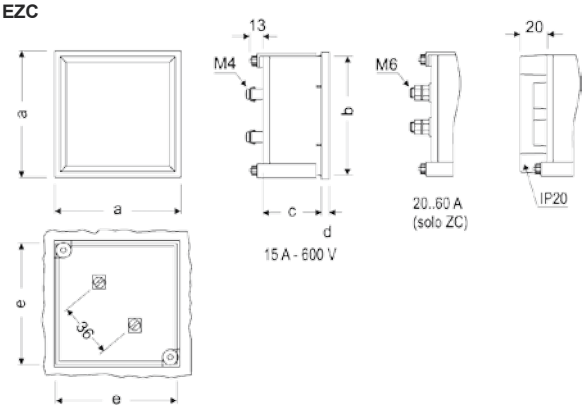

Type	Fig. EZC	a	b	c	d	e
72 mm	1	72	67,2	43,5	5,7	68
96 mm	1	96	91	43,5	5,7	92

Dimensions (mm)

EC-FN / EC-F

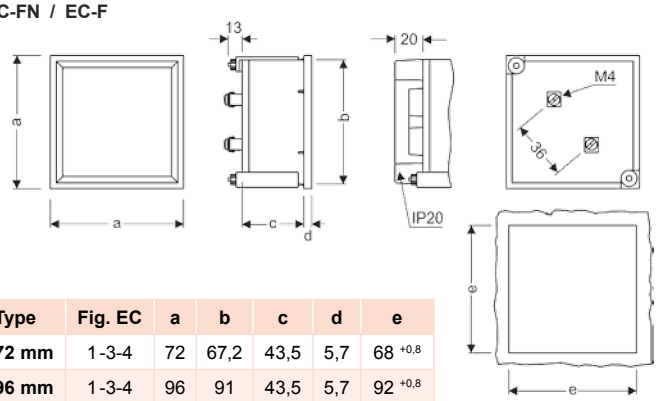

Type	Fig. EC	a	b	c	d	e
72 mm	1-3-4	72	67,2	43,5	5,7	68 $^{+0,8}$
96 mm	1-3-4	96	91	43,5	5,7	92 $^{+0,8}$

Dimensions (mm)

EM 45

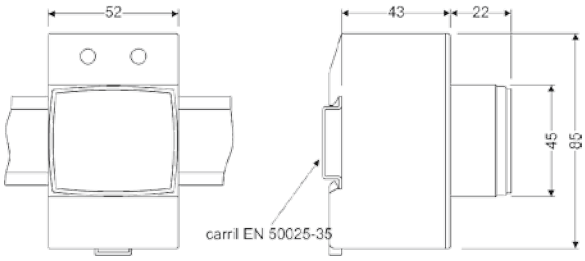

Connections

EC / EZC

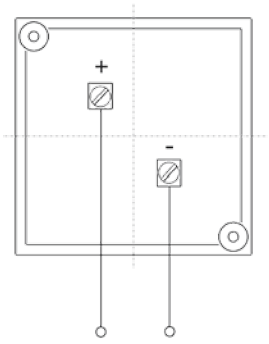

EC-F

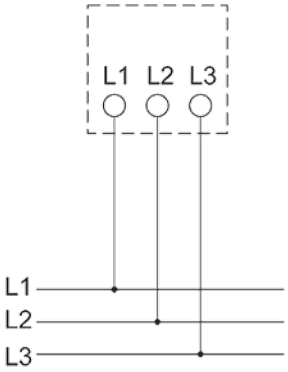

EC-FN

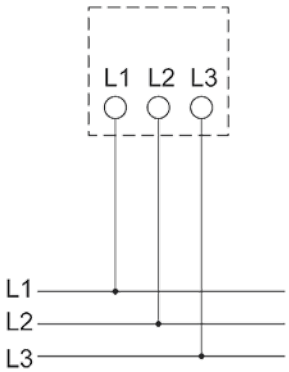

EM 45

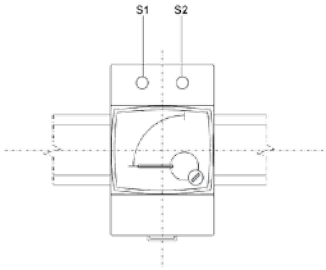

Moving-coil ammeter (DC)

Moving-coil ammeter

Analogue indicator to measure direct current

Description

- No need for auxiliary power supply, only the **CEC 96** type
- DIN boxes with dimensions: 48, 72, 96 and 144
- Precision class 1.5
- Measurement in DC 25 uA ... 60 A, or ... 60 mV
- Exchangeable scales for **BC48, BC72, BC96, BM 45**
- The alarm system can be fully configured for **CBC 96**

Application

In direct current applications, to control the state of the current quickly and visually.

Features

	BC	BM	CBC 96
Auxiliary power supply			230 V ac
Consumption	-		2.5 V·A
Frequency	-		40 ... 90 Hz
Input circuit			
Consumption	60 mV		0.2 V·A
Overloads	1.2 I_n permanent 5 I_n during 30 s 10 I_n during 5 s 40 I_n during 1 s		1.2 I_n permanent 5 I_n during 30 s 10 I_n during 5 s 40 I_n during 1 s
Class	1.5 % FS		
Ambient conditions			
Operating temperature	+10 ... +30 ºC		+ 5 ... +55 ºC
Limit temperature	- 25 ... +40 ºC		-25 ... +70 ºC
Altitude	2000 m		
Build features			
Dimensions	See the following table		
Weight	See the following table		
Type of box	panel	DIN rail	panel
Degree of protection:			
Front panel	IP 52		IP 52
terminals	IP 00		IP 20
Insulation voltage	2 kV, during 1 min, between the mechanism and the box		
Standards	**BS 89, EN 60051, IEC 144, UL 94, DIN 43780, IEC 51, UNE 21318, CE**		**IEC51, IEC 1010, IEC 529, IEC 255, IEC 278, IEC 414, IEC 144, LLOYD'S (TEST. ESP. No. 1)**

Moving-coil ammeter (DC)

Moving-coil ammeter

Analogue indicator to measure direct current

References

BC: Ammeters 90º / BM: Ammeters 90º, DIN rail / CBC96: Ammeters with 2 relays



Ammeters, 90º						Ammeters with 2 relays
Type	**BC 48**	**BC 72**	**BC 96**	**BC 144**	**BM 45**	**CBC 96**
Class	1,5					1,5
Scale	90º , P1					90º , P1
Dimensions (mm)						
a	48	72	96	144	85	96
b	48	72	96	144	52	96
c	66,2	49,2	49,2	71,8	65	85,3
Weight (g)	75	170	210	420	110	435
A						
5	**M11412**	**M11422**	**M11432**	**M11442**	**M11452**	**-**
10	**M11413**	**M11423**	**M11433**	**M11443**	**M11453**	**-**
25	**M11416**	**M11426**	**M11436**	**M11446**	**M11456**	**-**
50	**M11419**	**M11429**	**M11439**	**M11449**	**M11459**	**-**
60	**-**	**M1142A**	**M1143A**	**M1144A**	**M1145A**	**-**
.../60 mV(*)	**M11410**	**M11420**	**M11430**	**M11440**	**M11450**	**M14830**

* **BC48 / BC72 / BC96 / BC144 / BM45:**
*Scale is not included, except in **EC144** (equipment + scale included, indicate transformer ratio)
*For exchangeable scales, see Tables. External shunts, see M.7
*Different input ranges, shunt
*Central zero adjustment, on demand
*Inputs starting on 25 uA, on demand

* **CEC96:**
*Scale included, indicate the transformer ratio (shunt)

Exchangeable scales

Type	SBC 48	SBC 72	SBC 96	SBM 45
Equipment	**BC 48**	**BC 72**	**BC 96**	**BM 45**
A / mV				
50/60	**M114Z9**	**M114Y9**	**M114X9**	**M114V9**
60/60	**M114ZA**	**M114YA**	**M114XA**	**M114VA**
75/60	**M114ZB**	**M114YB**	**M114XB**	**M114VB**
100/60	**M114ZC**	**M114YC**	**M114XC**	**M114VC**
150/60	**M114ZE**	**M114YE**	**M114XE**	**M114VE**
200/60	**M114ZF**	**M114YF**	**M114XF**	**M114VF**
250/60	**M114ZG**	**M114YG**	**M114XG**	**M114VG**
300/60	**M114ZH**	**M114YH**	**M114XH**	**M114VH**
400/60	**M114ZJ**	**M114YJ**	**M114XJ**	**M114VJ**
600/60	**M114ZL**	**M114YL**	**M114XL**	**M114VL**
1 000/60	**M114ZP**	**M114YP**	**M114XP**	**M114VP**
1 500/60	**M114ZR**	**M114YR**	**M114XR**	**M114VR**
2 500/60	**M114ZT**	**M114YT**	**M114XT**	**M114VT**

* If the input of the unit requested is not .../60mV, indicate the ratio.

Coding table

BC and BM45 Ammeters

M	1	X	X	X	X	0	0	X	X	X
Code						Internal Code				
Setting			Standard					0		
			Central zero					1		
Shunt input range			Standard (.../60 mV)						0	
			.../50 mV						1	
			.../150 mV						3	
			.../300 mV						5	
Scales			50							9
			60							A
			75							B
			100							C
			150							E
			200							F
			250							G
			300							H
			400							J
			500							K
			600							L
			1000							P
			1500							R
			2500							T

SBC and SBM45 Scales

M	1	X	X	X	X	0	0	X	X
Code						Internal Code			
Setting			Standard					0	
			Central zero					1	
Shunt input range			Standard (.../60 mV)						0
			.../50 mV						1
			.../150 mV						3
			.../300 mV						5

Moving-coil ammeter (DC)

Moving-coil ammeter

Analogue indicator to measure DC current

References

BC

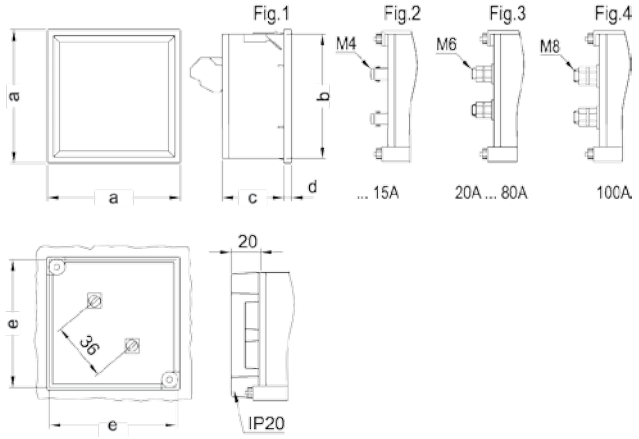

Type	Fig. BC	a	b	c	d	e
48 mm	1-3	48	44,7	61	5,2	45
72 mm	2-3-4	72	67,2	43,5	5,7	68
96 mm	2-3-4	96	91	43,5	5,7	92
144 mm	2-3-4	144	137	64,5	7,3	138

Dimensiones (mm)

CBC

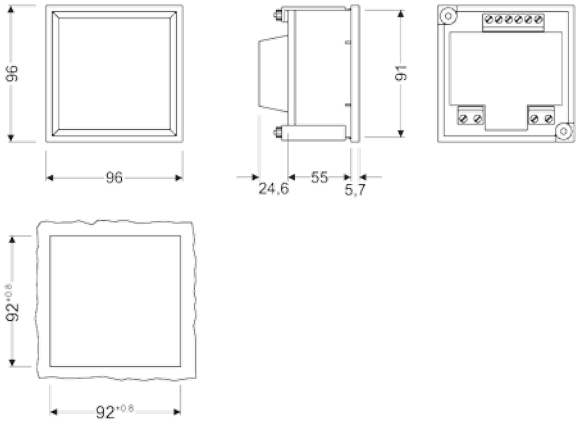

BM 45

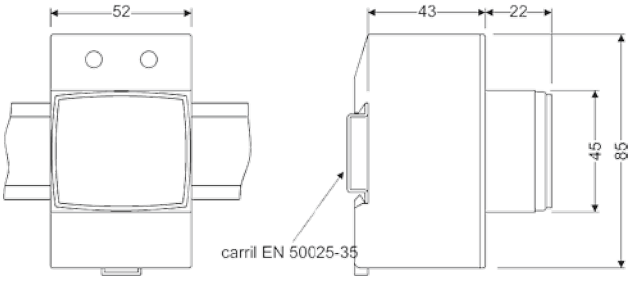

Connections

BC

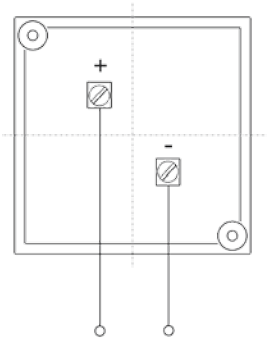

CBC

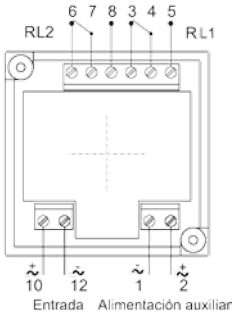

BM 45

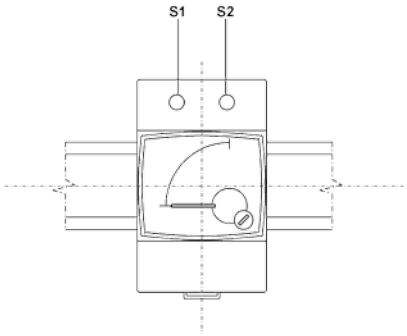

Moving-coil voltmeter (DC)

Moving-coil Voltmeter

Analogue indicator to measure DC voltage

Description

- No need for auxiliary power supply, only the CEC 96 type
- DIN boxes with dimensions: 48, 72, 96 and 144
- Precision class 1.5
- Measurement in DC 25 uA ... 60 A, or ... 60 mV
- Exchangeable scales for BC48, BC72, BC96, BM 45
- The alarm system can be fully configured for CBC 96

Application

In direct current applications, to control the state of the current quickly and visually.

Features

	BC	BM	CBC 96
Auxiliary power supply			230 V ac
Consumption	-		2.5 V·A
Frequency	-		40 ... 90 Hz
Input circuit			
Consumption	1 000Ω		0.2 V·A
Frequency	20 ... 100 Hz		45 ... 65 Hz
Overloads	1.5 U_n permanent 2 U_n permanent 5 s		1.2 U_n permanent
Temp. Coefficient			100 ppm / ºC
Class	1.5 % FS		
Ambient conditions			
Operating temperature	+10 ... +30 ºC		+ 5 ... +55 ºC
Limit temperature	- 25 ... +40 ºC		-25 ... +70 ºC
Altitude	2000 m		
Build features			
Dimensions	See the following table		
Weight	See the following table		
Type of box	panel	DIN rail	panel
Degree of protection:			
Front panel	IP 52		IP 52
terminals	IP 00		IP 20
Insulation voltage	2 kV, during 1 min, between the mechanism and the box		
Standards	**BS 89, EN 60051, IEC 144, UL 94, DIN 43780, IEC 51, UNE 21318, CE**		**IEC51, IEC 1010, IEC 529, IEC 255, IEC 278, IEC 414, IEC 144, LLOYD'S (TEST. ESP. No. 1)**

Moving-coil voltmeter (DC)

Moving coil voltmeter

Analogue indicator to measure DC voltage

References

BC: Voltmeters 90º

BM: Voltmeters 90º, DIN rail

CBC96: Voltmeters with relay 90º

	Voltmeters, 90º					Voltmeters with relay
Type	**BC 48**	**BC 72**	**BC 96**	**BC 144**	**BM 45**	**CBC 96**
Class	1,5					
Scale	90º , P1					90º , P1
Dimensions (mm)						
a	48	72	96	144	85	96
b	48	72	96	144	52	96
c	66,2	49,2	49,2	71,8	65	85,3
Weight (g)	75	170	210	420	110	435
V						
0..0.10 V	**M11813**	**M11823**	**M11833**	**M11843**	**-**	**-**
1	**M11711**	**M11721**	**M11731**	**M11741**	**-**	**-**
15	**M11714**	**M11724**	**M11734**	**M11744**	**M11754**	**-**
30	**M11716**	**M11726**	**M11736**	**M11746**	**M11755**	**-**
60	**M11718**	**M11728**	**M11738**	**M11748**	**M11756**	**-**
100	**M11719**	**M11729**	**M11739**	**M11749**	**M11757**	**-**
150	**M1171A**	**M1172A**	**M1173A**	**M1174A**	**M11758**	**M14841**
250	**M1171B**	**M1172B**	**M1173B**	**M1174B**	**-**	**M14842**
300	**-**	**-**	**-**	**-**	**-**	**M14843**
400	**M1171D**	**M1172D**	**M1173D**	**M1174D**	**-**	**M14844**
500	**M1171E**	**M1172E**	**M1173E**	**M1174E**	**-**	**M14845**
600	**M1171F**	**M1172F**	**M1173F**	**M1174F**	**-**	**M14846**

*Scale not included, indicate voltage input
*Inputs of more than 10 mV, on demand

Coding table

BC and BM Voltmeters	M	1	X	X	X	X	0	0	X
	Code						Internal Code		↑
	Setting			Standard					0
				Central zero					1

Moving-coil voltmeter (DC)

Moving coil voltmeter

Analogue indicator to measure DC voltage

References

BC

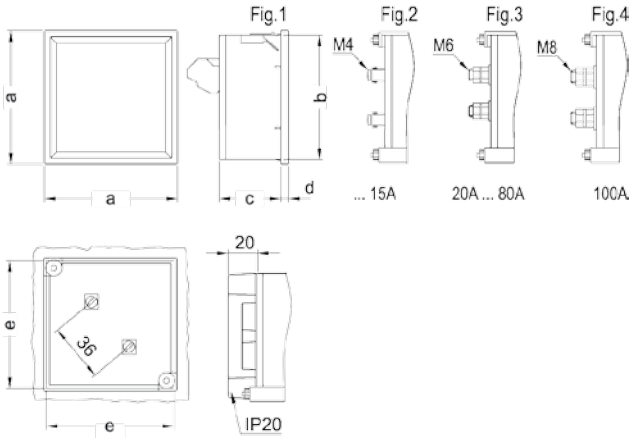

Type	Fig. BC	a	b	c	d	e
48 mm	1-3	48	44,7	61	5,2	45
72 mm	2-3-4	72	67,2	43,5	5,7	68
96 mm	2-3-4	96	91	43,5	5,7	92
144 mm	2-3-4	144	137	64,5	7,3	138

Dimensiones (mm)

CBC

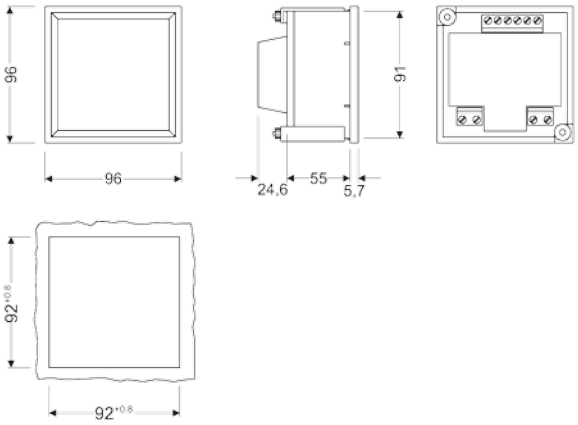

BM45

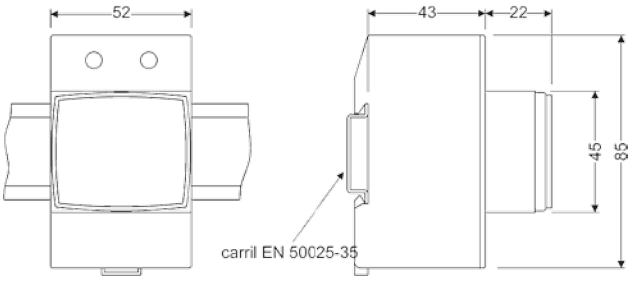

Connections

BC

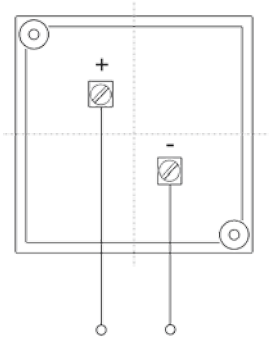

CBC

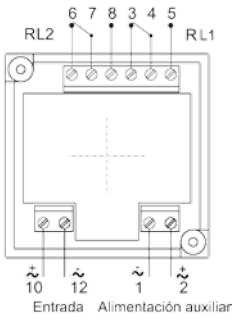

BM 45

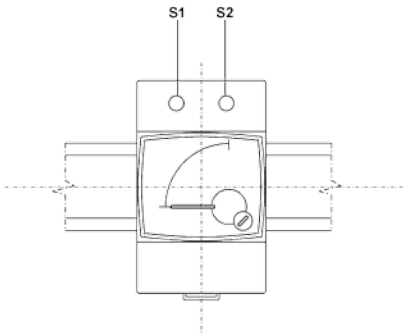

Process indicators

Analogue indicator to measure a process signal

Description

- Does not need an auxiliary power supply
- DIN boxes with dimensions: 48, 72, 96 and 144
- Precision class 1.5
- Measurement in DC of 0 ... 10 V, 0/4 ... 20 mA, .../60 mV
- Exchangeable scales for **BC48, BC72, BC96, BM 45**

Application

For the measurement of the mean value of voltages and currents in direct current circuits, even of the pulsating type, in a vast margin of values.

Features

	BC	BM	ZC
Input circuit			
Consumption	1 000Ω		V·A
Overloads	1.5 U_n permanent 2 U_n permanent 5 s		
Class	1.5 % FS		
Ambient conditions			
Operating temperature	+10 ... +30 ºC		
Limit temperature	- 25 ... +40 ºC		
Altitude	2000 m		
Build features			
Dimensions	See the following table		
Weight	See the following table		
Type of box	panel	DIN rail	panel
Degree of protection:			
Front panel	IP 52		IP 52
terminals	IP 00		IP 20
Insulation voltage	2 kV, during 1 min, between the mechanism and the box		
Standards	**BS 89, EN 60051, IEC 144, UL 94, DIN 43780, IEC 51, UNE 21318**		

Process indicators

Analogue indicator to measure
a process signal

References

BC: Process indicators 90º

Process indicators, 90º					
Type	**BC 48**	**BC 72**	**BC 96**	**BC 144**	**BM 45**
Class	1,5				
Scale	90º , P1				
Dimensions (mm)					
a b c	48 48 66,2	72 72 49,2	96 96 49,2	144 144 71,8	85 52 65
Weight (g)	75	170	210	420	110
Scope					
0..0.10 V	**M11813**	**M11823**	**M11833**	**M11843**	**M11853**
0...20 mA	**M11812**	**M11822**	**M11832**	**M11842**	**M11852**
4...20 mA	**M11811**	**M11821**	**M11831**	**M11841**	**M11851**
.../60 mV	-	-	-	-	-

ZC: Process indicators, 240º

Process indicators, 240º				
Type	**ZC 48**	**ZC 72**	**ZC 96**	**ZC 144**
class	1,5			
Scale	240º, P1			
Dimensions (mm)				
a b c	48 4866,2	72 7249,2	96 9649,2	144 14471,8
Weight (g)	75	170	210	420
Scope				
0..0.10 V	**M12513**	**M12523**	**M12533**	**M12543**
0...20 mA	-	-	-	-
4...20 mA	**M12511**	**M12521**	**M12531**	**M12541**
.../60 mV	**M12510**	**M12520**	**M12530**	**M12540**

Exchangeable scales

Type	**SIP 48**	**SIP 72**	**SIP 96**	**SIPM 45**
Equipment	**BC 48**	**BC 72**	**BC 96**	**BM 45**
Scope				
0..0.10 V	**M118Z3**	**M118Y3**	**M118X3**	**M118V3**
0...20 mA	**M118Z2**	**M118Y2**	**M118X2**	**M118V2**
4...20 mA	**M118Z1**	**M118Y1**	**M118X1**	**M118V1**

Coding table

BC and ZC process indicators

M	1	X	X	X	X	0	0	X	X	
Code						Internal Code				
Setting			Standard					0		
			Central zero					1		
Scale			1						1	
			5						2	
			10						3	
			15						4	
			20						5	
			25						6	
			30						7	
			40						8	
			50						9	
			60						A	
			75						B	
			100						C	
			125						D	
			150						E	
			200						F	
			250						G	
			300						H	
			400						J	
			500						K	
			600						L	
			750						M	
			800						N	
			1000						P	
			1200						Q	
			1500						R	
			2000						S	
			2500						T	
			3000						U	
			4000						V	
			5000						W	
			-							0
			mA							1
			A							2
			kA							3
			mV							4
			V							8
			kV							9
			rpm							A
			rpm x 1000							B
			l (litres)							C
			m							G
			m^2							H
			m^3							J
			%							K

Process indicators

Analogue indicator to measure
a process signal

Dimensions

ZC

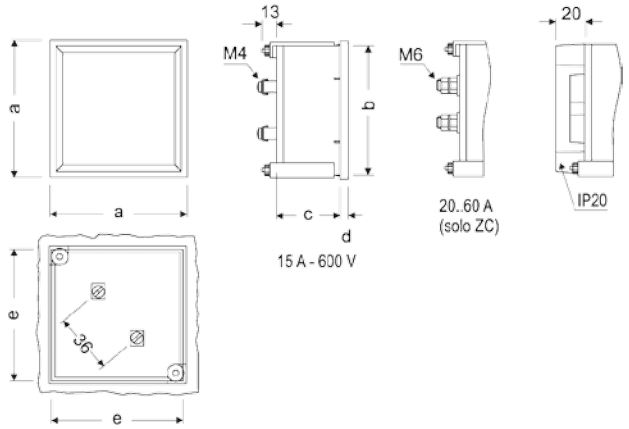

Type	Fig. ZC	a	b	c	d	e
48 mm	1	48	44,7	61	5,2	45
72 mm	1	72	67,2	43,5	5,7	68
96 mm	1	96	91	43,5	5,7	92
144 mm	1	144	137	64,5	7,3	138

Dimensiones (mm)

BC

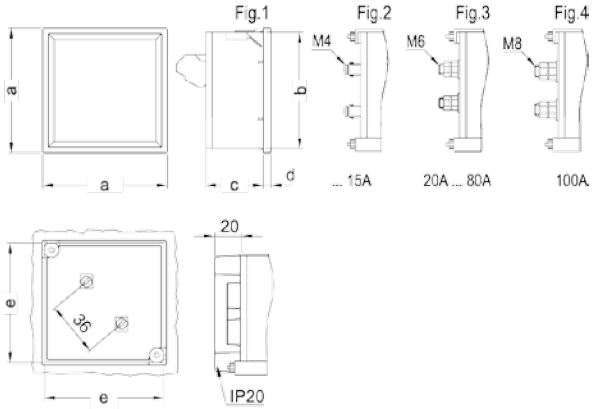

Type	Fig. BC	a	b	c	d	e
48 mm	1-3	48	44,7	61	5,2	45
72 mm	2-3-4	72	67,2	43,5	5,7	68
96 mm	2-3-4	96	91	43,5	5,7	92
144 mm	2-3-4	144	137	64,5	7,3	138

Dimensiones (mm)

BM

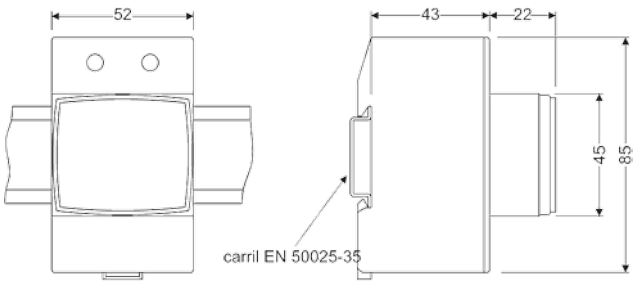

Connections

BC / ZC

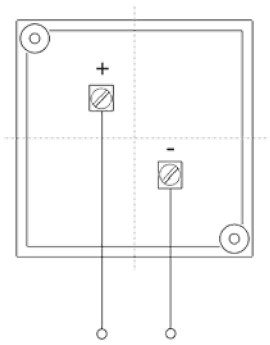

BM

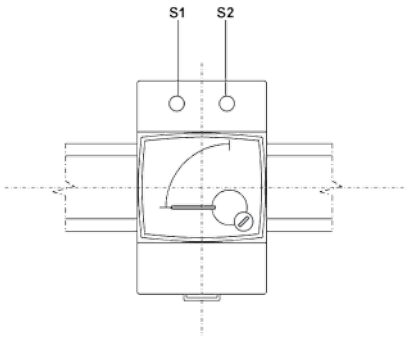

Power demand meters

Analogue indicator to measure
alternating current and its maximeter

Description

- Does not need an auxiliary power supply
- DIN boxes with dimensions 48, 72, 96 and 144
- Class 3
- Measurement in AC of .../5 A (on demand.../1 A)
- Exchangeable scales for **MC48, MC72, MC96, MM 45, EMC72, EMC96**
- Thermal inertia times of 15 min (on demand, 8 and 30 min)

Application

To control the alternating current and measure long overloads in the same unit, integrated within a determined period.

Features

	MC	MMC	EMC
Input circuit			
Consumption	3.25 V·A		4.25 V·A
Overloads	1.5 I_n permanent 15 I_n during 1 s		
Accuracy	±3 % FS		±3 % Bim.±1.5 % HM
Ambient conditions			
Operating temperature	+10 ... +30 ºC		
Limit temperature	- 25 ... +40 ºC		
Altitude	2000 m		
Build features			
Dimensions	See the following table		
Weight	See the following table		
Type of box	panel	DIN rail	panel
Degree of protection:			
Front panel	IP 52		IP 52
terminals	IP 00		IP 00
Insulation voltage	2 kV, during 1 min, between the mechanism and the box		
Standards	**BS 89, EN 60051, IEC 144, UL 94, DIN 43780, IEC 51, UNE 21318**		

Power demand meters

Analogue indicator to measure
alternating current and its maximeter

References

MC: Bimetallic power demand ammeters, 90º

MMC: Bimetallic power demand ammeters, 90º, DIN rail

Bimetallic maximeter ammeters					
Type	**MC 48**	**MC 72**	**MC 96**	**MC 144**	**MMC 45**
class	3				
Scale	90º , P1.2				
Dimensions (mm)					
a b c	48 4866,2	72 7249,2	96 9649,2	144 14471,8	85 5265
Weight (g)	110	140	210	420	
A					
... / 5 A	**M12211**	**M12221**	**M12231**	**M12241**	**M12651**

* Scale not included. Indicate transformer ratio
* For exchangeable scales, see Tables

EMC: Bimetallic power demand ammeters + Moving iron ammeter, 90º

Bimetallic maximeter ammeters + Moving iron ammeter			
Type	**EMC 72**	**EMC 96**	**EMC 144**
class	Bimetallic: 3 Moving iron: 1,5		
Scale	Double scale 90º, bimetallic: P1.2, moving iron P2		
Dimensions (mm)			
a b c	72 7249,2	96 9649,2	144 14471,8
Weight (g)	220	260	470
A			
... / 5 A	**M12622**	**M12632**	**M12642**

* Scale not included. Indicate transformer ratio
* For exchangeable scales, see Tables

Exchangeable scales

Exchangeable scales						
Type	**SMC 48**	**SMC 72**	**SMC 96**	**SMMC 45-A**	**SEMC 72**	**SEMC 96**
Equipment	**MC 48**	**MC 72**	**MC 96**	**MMC 45**	**EMC 72**	**EMC 72**
A						
100/5	**M122ZC**	**M122YC**	**M122XC**	**M126VC**	**M126YC**	**M126XC**
200/5	**M122ZF**	**M122YF**	**M122XF**	**M126VF**	**M126YF**	**M126XF**
300/5	**M122ZH**	**M122YH**	**M122XH**	**M126VH**	**M126YH**	**M126XH**
400/5	**M122ZJ**	**M122YJ**	**M122XJ**	**M126VJ**	**M126YJ**	**M126XJ**
500/5	**M122ZK**	**M122YK**	**M122XK**	**M126VK**	**M126YK**	**M126XK**
600/5	**M122ZL**	**M122YL**	**M122XL**	**M126VL**	**M126YL**	**M126XL**
750/5	**M122ZM**	**M122YM**	**M122XM**	**M126VM**	**M126YM**	**M126XM**
800/5	**M122ZN**	**M122YN**	**M122XN**	**M126VN**	**M126YN**	**M126XN**
1 000/5	**M122ZP**	**M122YP**	**M122XP**	**M126VP**	**M126YP**	**M126XP**
1 500/5	**M122ZR**	**M122YR**	**M122XR**	**M126VR**	**M126YR**	**M126XR**
2 000/5	**M122ZS**	**M122YS**	**M122XS**	**M126VS**	**M126YS**	**M126XS**

* If the input of the unit requested is not .../5 A, indicate the ratio.

Power demand meters

Analogue indicator to measure alternating current and its maximeter

Coding table

MMC 45 power demand

M	1	X	X	X	X	0	0	X
Code						Internal Code		
Setting			Standard (15 minutes)					0
			8 minutes					1
			30 minutes					2

MC and EMC Power demand meters and SMC and SEMC Scales

M	1	X	X	X	X	0	0	X	X	X
Code						Internal Code				
Setting			Standard (15 minutes)					0		
			8 minutes					1		
			30 minutes					2		
Current input			Standard (.../ 5 A)						0	
			... / 1 A						1	
Scale			100							C
			125							D
			150							E
			200							F
			250							G
			300							H
			400							J
			500							K
			600							L
			750							M
			800							N
			1000							P
			1200							Q
			1500							R
			2000							S
			2500							T
			3000							U
			4000							V
			5000							W

Dimensions

EMC / MC

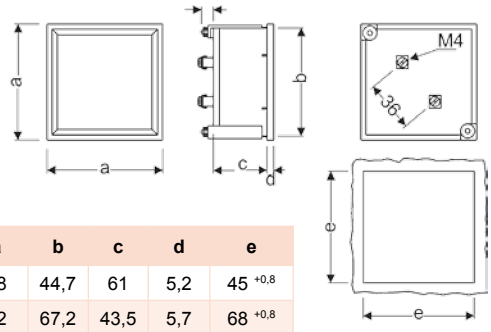

Type	a	b	c	d	e
MC 48	48	44,7	61	5,2	45 $^{+0,8}$
MC 72	72	67,2	43,5	5,7	68 $^{+0,8}$
EMC 72	72	67,2	57,2	5,7	68 $^{+0,8}$
EMC 96	96	91	43,5	5,7	92 $^{+0,8}$
EMC 144	144	137	64,5	7,3	138 $^{+1}$

Dimensions (mm)

MMC

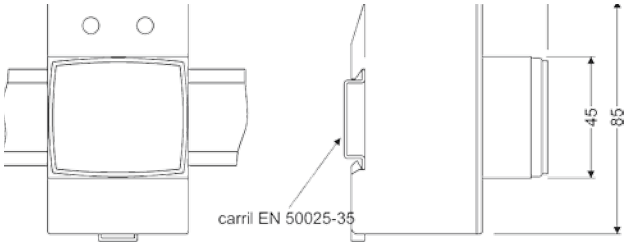

Connections

EMC / MC

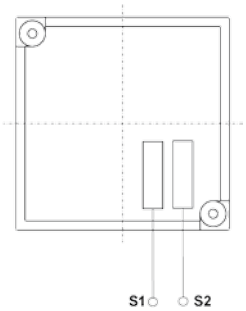

MMC

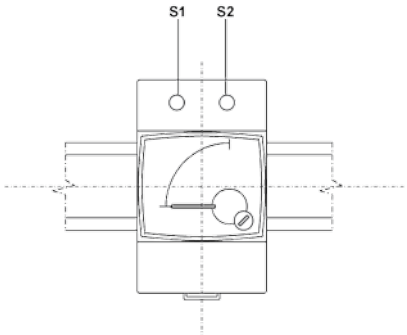

Pointer Frequency meters

Analogue indicator to measure frequency

Description

- Does not need an auxiliary power supply
- DIN box with dimensions: 48, 72, 96 and 144
- Class 0.5
- Built-in electronic converter

Application

Accurate and easy reading of frequency in alternating current circuits. The distortion of voltage (we shall measure its frequency) can reach 15% of the nominal voltage in the third order harmonic, while the Class is not affected.

Features

	HC	HM	HZC
Input circuit			
Consumption	2 ... 3 V·A		
Frequency	50 ... 400 Hz		
Overloads	1.5 I_n permanent 15 I_n during 1 s		
Measurement voltage	Standard 230 Vac Optional 100-120 Vac380-440 Vac		
Accuracy	0.5 % FS		
Ambient conditions			
Operating temperature	+10 ... +30 ºC		
Limit temperature	- 25 ... +40 ºC		
Altitude	2000 m		
Build features			
Dimensions	See the following table		
Weight	See the following table		
Type of box	panel	DIN rail	panel
Degree of protection:			
Front panel	IP 52		IP 52
Terminals	IP 00		IP 00
Insulation voltage	2 kV, during 1 min, between the mechanism and the box		
Standards	**BS 89, EN 60051, IEC 144, UL 94, DIN 43780, IEC 51, UNE 21318**		

Coding table

Reed HC, HZC and HM	M	1	X	X	X	X	0	0	X	X
	Code						Internal Code			
	Frequency			Standard (45...55 Hz)					0	
				57..0.63 Hz					1	
				55..0.65 Hz					3	
				45..0.65 Hz					4	
				47...53 Hz					5	
	Voltage			Standard (230 V)						0
				100 ... 120 V						1
				380 ... 400 V						3
				440 V						4

Pointer Frequency meters

Analogue indicator to measure frequency

References

Pointer Frequency meters, 90º



Frequency meters, 90º					
Type	HC 48	HC 72	HC 96	HC 144	HM 45
class	0,5				
Scale	90º				
Dimensions (mm)					
a	48	72	96	144	85
b	48	72	96	144	52
c	66,2	49,2	49,2	71,8	65
Weight (g)	95	175	215	425	250
Hz					
45...55	M12711	M12721	M12731	M12741	M12751
57...63	M12711001	M12721001	M12731001	M12741001	M12751001
55...65	M12711003	M12721003	M12731003	M12741003	M12751003
45...65	M12711004	M12721004	M12731004	M12741004	M12751004
47...63	M12711005	M12721005	M12731005	M12741005	M12751005

Pointer Frequency meters, 240º

Frequency meters, 240º		
Type	HZC 96	HZC 144
class	0,5	
Scale	240º	
Dimensions (mm)		
a	96	144
b	96	144
c	101.2	102
Weight (g)	180	520
Hz		
45...55	M12831	M12841
57...63	M12831001	M12841001
55...65	M12831003	M12841003
45...65	M12831004	M12841004
47...63	M12831005	M12841005

Dimensions

HC

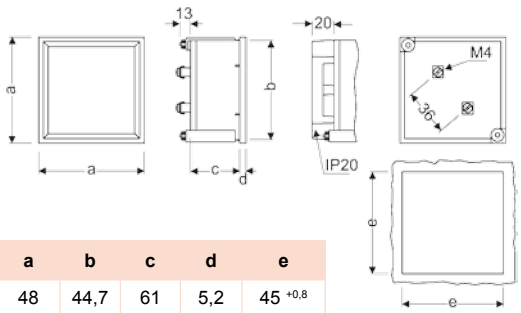

Type	a	b	c	d	e
48	48	44,7	61	5,2	45 +0,8
72	72	67,2	43,5	5,7	68 +0,8
96	96	91	43,5	5,7	92 +0,8
144	144	137	64,5	7,3	138 +1

Dimensions (mm)

HZC

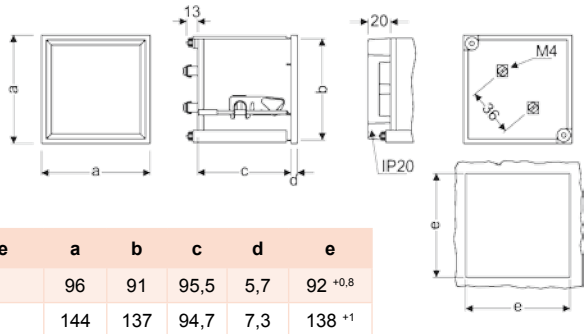

Type	a	b	c	d	e
96	96	91	95,5	5,7	92 +0,8
144	144	137	94,7	7,3	138 +1

Dimensions (mm)

HM

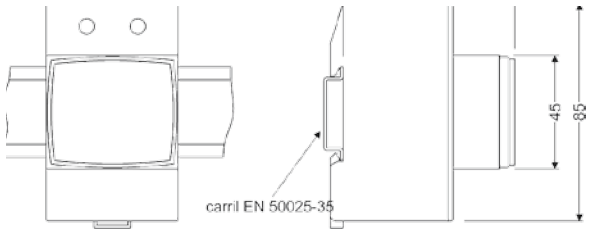

Connections

HC / HZC

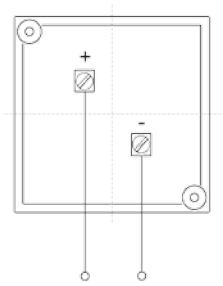

HM

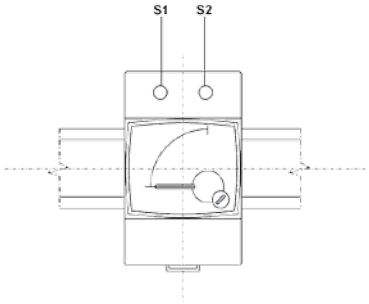

Reed Frequency- meters

Analogue indicator to measure frequency

Description

- Does not need an auxiliary power supply
- DIN box with dimensions: 72, 96 and 144 mm
- Class 0.5
- Independent measurement of the wave shape

Application

Measurement of the frequency in alternating current circuits, for any type of wave shape and under adverse environmental and physical conditions.

Features

	HLC
Input circuit	
Consumption	1 ... 3.6 V·A
Nominal operating frequency	50 or 60 Hz
Overloads	1.2 U_n permanent 2 U_n during 5 s
Measurement voltage	Standard 230 Vac Optional 100...120 Vac / 380...440 Vac
Accuracy	0.5 % FS
Ambient conditions	
Operating temperature	+10 ... +30 ºC
Limit temperature	- 25 ... +40 ºC
Altitude	2000 m
Build features	
Dimensions	See the following table
Weight	See the following table
Type of box	panel
Degree of protection:	
Front panel	IP 52
Terminals	IP 00
Insulation voltage	2 kV, during 1 min, between the mechanism and the box
Standards	**BS 89, EN 60051, IEC 144, UL 94, DIN 43780, IEC 51, UNE 21318**

Reed Frequency meters

Analogue indicator to measure frequency

References

Reed Frequency meters				
Type		**HLC 72**	**HLC 96**	**HLC 144**
Class		**0,5**		
Dimensions (mm)				
	**a** **b** **c**	72 72 49,2	96 96 49,2	144 144 71,8
Weight (g)		230	300	423
Hz				
47...53, 13 reeds		**M12921**	**M12931**	**M12941**
45..0.55, 11 reeds	**50 Hz**	**M12921002**	**M12931002**	**M12941002**
47...53, 7 reeds		**M12921005**	**M12931005**	**M12941005**
57..0.63, 13 reeds		**M12921001**	**M12931001**	**M12941001**
55..0.65, 11 reeds	**60 Hz**	**M12921003**	**M12931003**	**M12941003**
57..0.63, 7 reeds		**M12921004**	**M12931004**	**M12941004**

Coding table

HLC Frequency meters

M	1	X	X	X	X	0	0	X	X
Code						Internal Code			

Frequency / No. reeds	Standard (47...53 Hz/ 13 reeds)	0
	57...63 Hz / 13 reeds	1
	45..0.55 Hz / 11 reeds	2
	55...65 Hz / 11 reeds	3
	57...63 Hz / 7 reeds	4
	47..0.53 Hz / 7 reeds	5
Voltage	Standard (230 V)	0
	100 ... 120 V	1
	380 ... 400 V	3
	440 V	4

Dimensions

HLC

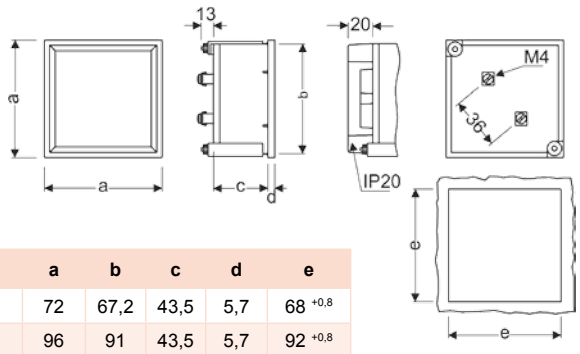

Type	a	b	c	d	e
72	72	67,2	43,5	5,7	68 $^{+0,8}$
96	96	91	43,5	5,7	92 $^{+0,8}$
96 (c)	96	91	57,2	5,7	92 $^{+0,8}$
144	144	137	64,5	7,3	138 $^{+1}$

Dimensions (mm)

Connections

HLC

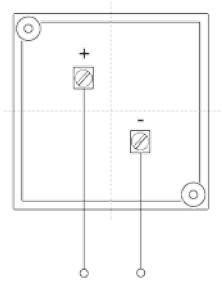

Wattmeters

Analogue indicator to measure active power

Description

- Does not need an auxiliary power supply
- DIN box with dimensions 96 and 144. Class 1.5
- Built-in electronic converter
- Balanced and unbalanced single and three-phase circuits.

Application

Measurement of active power in balanced or unbalanced single and three-phase circuits.

Features

	WMC	WTC
Voltage circuit		
Voltage	400 V	
Consumption	1 ... 4 V·A	
Frequency	45 ... 65 Hz	
Overloads	1.25 U_n permanent 2 U_n during 5 s	
Current circuit		
Nominal current	... 5 A	
Consumption	0.3 ... 1.5 V·A	
Frequency	45 ... 65 Hz	
Overloads	1.2 I_n permanent 5 I_n during 30 s 10 I_n during 5 s 40 I_n during 1 s	
Accuracy	± 1.5 % FS	
Ambient conditions		
Operating temperature	+10 ... +30 ºC	
Limit temperature	- 25 ... +40 ºC	
Altitude	2000 m	
Build features		
Dimensions	See the following table	
Weight	See the following table	
Type of box	panel	
Degree of protection:		
Front panel	IP 52	
Terminals	IP 00	
Insulation voltage	2 kV, during 1 min, between the mechanism and the box	
Standards	**BS 89, EN 60051, IEC 144, UL 94, DIN 43780, IEC 51, UNE 21318**	

Wattmeters

Analogue indicator to measure active power

References

WMC: Single-phase wattmeters

	Single-phase	
Type	**WMC 96**	**WMC 144**
Class	1,5	
Scale	90º P1 (Simple profile)	
Dimensions (mm)		
 **a** **b** **c**	96 96 49,2	144 144 71,8
Weight (g)	290	490
$U_{phase\text{-}phase}$	400 V	
	(*) M13031	**M13041**

*Scale is NOT included for **WMC 96.** For exchangeable scales, see Tables.
*Scale included for **WMC 144**. Indicate the transformer ratio, power and voltage scale base.
*Other voltage values, on demand.

WTC: Three-phase wattmeters

	Balanced three-phase		Three-phase 3 wires (ARON)		Three-phase (4 wires)	
Type	**WTC 96E**	**WTC 144E**	**WTC 96A**	**WTC 144A**	**WTC 96AN**	**WTC 144AN**
Class	1,5					
Scale	90º P1 (Simple profile)					
Dimensions (mm)						
 **a** **b** **c**	96 96 49,2	144 144 71,8	96 96 62,9	144 144 71,8	96 96 62,9	144 144 71,8
Weight (g)	290	490	430	640	430	640
$U_{phase\text{-}phase}$	400 V		110 V		400 V	
	(*)M13032	**M13032**	**M13034**	**M13044**	**(*)M13033**	**M13043**

*Scale is NOT included for **WTC 96E** and **WTC 96AN**.
For exchangeable scales, see Tables.
*Scale included for **WTC 144E**, **WTC 96A, WTC144A** and **WTC 144AN**.
Indicate the transformer ratio, power and voltage scale base.
*Other voltage values, on demand.

Wattmeters

Analogue indicator to measure active power

References

Exchangeable scales

Single-phase wattmeters

Exchangeable scales		
	Single-phase	
Type	SWM 96	
Equipment	WMC 96	
A	Scale Base	Code
50/5	20 kW	M130J9
75/5	-	-
100/5	40 kW	M130JC
150/5	60 kW	M130JE
200/5	80 kW	M130JF
300/5	120 kW	M130JH
400/5	160 kW	M130JJ
500/5	200 kW	M130JK
600/5	240 kW	M130JL
1 000/5	400 kW	M130JP
1 500/5	600 kW	M130JR
2 000/5	800 kW	M130JS
3 000/5	1.2 MW	M130JU
4 000/5	1.6 MW	M130JV
5 000/5	2.0 MW	M130JW

Three-phase wattmeters

Exchangeable scales			
	Three-phase		
Type		SWT 96E	SWT 96AN
Equipment		WTC 96E	WTC 96AN
A	Scale Base	Code	Code
50/5	30 kW	M130K9	M130L9
75/5	50 kW	M130KB	M130LB
100/5	60 kW	M130KC	M130LC
150/5	90 kW	M130KE	M130LE
200/5	120 kW	M130KF	M130LF
300/5	180 kW	M130KH	M130LH
400/5	240 kW	M130KJ	M130LJ
500/5	300 kW	M130KK	M130LK
600/5	360 kW	M130KL	M130LL
1 000/5	600 kW	M130KP	M130LP
1 500/5	900 kW	M130KR	M130LR
2 000/5	1.2 MW	M130KS	M130LS
3 000/5	1.8 MW	M130KU	M130LU
4 000/5	2.4 MW	M130KV	M130LV
5 000/5	3 MW	M130KW	M130LW

Wattmeters

Analogue indicator to measure active power

Coding table

Wattmeters	M	1	X	X	X	X	0	0	X	X	X
	Code						Internal Code				
	Current input			Standard .../ 5 A					0		
				... / 1 A					1		
	Voltage			Standard (400 V_{p-p})						0	
				110 V_{p-p} (a)						1	
				230 V_{p-p}						2	
				440 V_{p-p}						5	
				460 V_{p-p}						6	
	Scale range Primary current transformer			50							9
				75							B
				100							C
				150							E
				200							F
				300							H
				400							J
				500							K
				600							L
				1000							P
				1500							R
				2000							S
				3000							U
				4000							V
				5000							W

(a) For unbalanced ARON (3 wire) three-phase units, 100 V is considered the standard voltage

Wattmeter scales	M	1	X	X	X	X	0	0	X	X
	Code						Internal Code			
	Current input			Standard .../ 5 A					0	
				... / 1 A					1	
	Voltage			Standard (400 V)						0
				110 V (a)						1
				230 V						2
				440 V						5
				460 V						6

(a) For unbalanced ARON (3 wire) three-phase units, 100 V is considered the standard voltage

Wattmeters

Analogue indicator to measure active power

Dimensions

WMC / WTC

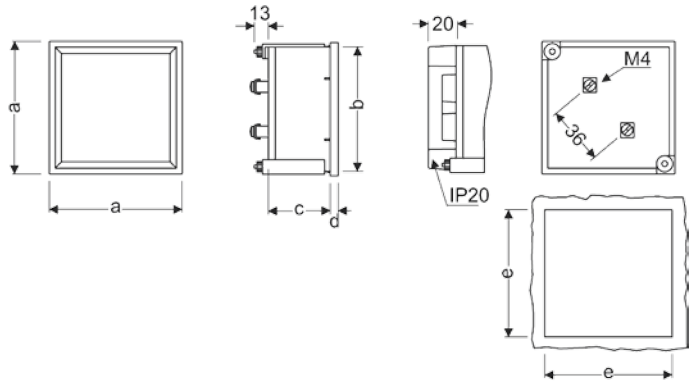

Type	a	b	c	d	e
96 E	96	91	43,5	5,7	92 +0,8
96 A / AN	96	91	57,2	5,7	92 +0,8
144	144	137	94,7	7,3	138 +1

Dimensions (mm)

Connections

WMC

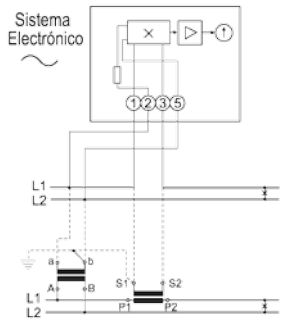

WTCE

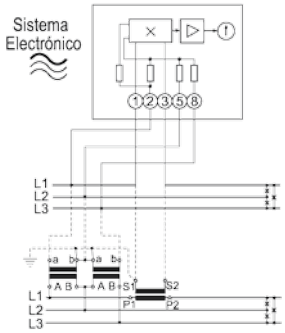

WTCA

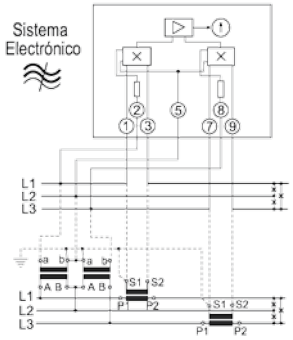

WTCAN

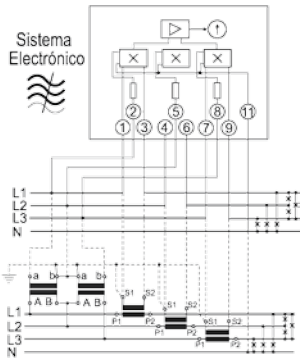

Varmeters

Analogue indicator to measure reactive power

Description

- Does not need an auxiliary power supply
- DIN box with dimensions 96 and 144.
- Class 1.5
- Built-in electronic converter
- Balanced and unbalanced single and three-phase circuits.

Application

Measurement of the power factor in balanced or unbalanced single and three-phase circuits.

Features

	YMC	YTC
Voltage circuit		
Voltage	400 V (*1)	
Consumption	1 ... 4 V·A	
Frequency	50 Hz (*1)	20 ... 100 Hz
Overloads	1.25 U_n permanent 2 U_n during 5 s	
Current circuit		
Nominal current	... 5 A (*1)	
Consumption	0.3 ... 1.5 V·A	
Frequency	50 Hz (*1)	20 ... 100 Hz
Overloads	1.2 I_n permanent 5 I_n during 30 s 10 I_n during 5 s 40 I_n during 1 s	
Accuracy	± 1.5 % FS	
Ambient conditions		
Operating temperature	+10 ... +30 ºC	
Limit temperature	- 25 ... +40 ºC	
Altitude	2000 m	
Build features		
Dimensions	See the following table	
Weight	See the following table	
Type of box	panel	
Degree of protection:		
Front panel	IP 52	
Terminals	IP 00	
Insulation voltage	2 kV, during 1 min, between the mechanism and the box	
Standards	**BS 89, EN 60051, IEC 144, UL 94, DIN 43780, IEC 51, UNE 21318**	

(*1) Other values, on demand

Varmeters

Analogue indicator to measure reactive power

References

YMC: Varmeters single-phase

	Single-phase	
	YMC 96	YMC 144
Class	1,5	
Scale	90 º P1 (simple profile)	
Dimensions (mm)		
a	96	144
b	96	144
c	49,2	71,8
Weight (g)	290	490
$U_{phase-phase}$	400 V	
Current	... / 5 A	
	M13231	M13241

*Scale is NOT included for **YMC 96**. For exchangeable scales, see Tables.
*Scale included for **YMC 144**. Indicate the transformer ratio, power and voltage scale base.
*Other voltage values, on demand.

YTC: Three-phase varmeters

	Balanced three-phase		Three-phase 3 wires (ARON)		Three-phase (4 wires)	
	YTC 96E	YTC 144E	YTC 96A	YTC 144A	YTC 96AN	YTC 144AN
Class						
Scale	90 º P1 (simple profile)					
Dimensions (mm)						
a	96	144	96	144	96	144
b	96	144	96	144	96	144
c	49,2	71,8	62,9	71,8	62,9	71,8
Weight (g)	290	490	430	640	430	640
$U_{phase-phase}$	400 V		110 V		400 V	
Current						
	M13232	M13242	M13234	M13244	M13233	M13243

*Scale is NOT included for **YTC 96E** and **YTC 96AN**. For exchangeable scales, see Tables.
*Scale included for **YTC 144E, YTC 96A, YTC144A** and **YTC 144AN**. Indicate the transformer ratio, power and voltage scale base.
*Other voltage values, on demand.

Exchangeable scales

Single-phase varmeters

Exchangeable scales		
	Single-phase	
Type	SYM 96	
Equipment	YMC 96	
A	Scale Base	Code
50/5	20 kvar	M132J9
75/5	-	-
100/5	40 kvar	M132JC
150/5	60 kvar	M132JE
200/5	80 kvar	M132JF
300/5	120 kvar	M132JH
400/5	160 kvar	M132JJ
500/5	200 kvar	M132JK
600/5	240 kvar	M132JL
1 000/5	400 kvar	M132JP
1 500/5	600 kvar	M132JR
2 000/5	800 kvar	M132JS
3 000/5	1.2 Mvar	M132JU
4 000/5	1.6 Mvar	M132JV
5 000/5	2.0 Mvar	M132JW

Three-phase varmeters

Exchangeable scales			
	Three-phase		
Type		SYT 96E	SYT 96AN
Equipment		YTC 96E	YTC 96AN
A		Code	Code
50/5	30 kvar	M132K9	M132L9
75/5	45 kvar	M132KB	M132LB
100/5	60 kvar	M132KC	M132LC
150/5	90 kvar	M132KE	M132LE
200/5	120 kvar	M132KF	M132LF
300/5	150 kvar	M132KH	M132LH
400/5	240 kvar	M132KJ	M132LJ
500/5	300 kvar	M132KK	M132LK
600/5	360 kvar	M132KL	M132LL
1 000/5	600 kvar	M132KP	M132LP
1 500/5	900 kvar	M132KR	M132LR
2 000/5	1.2 Mvar	M132KS	M132LS
3 000/5	1.8 Mvar	M132KU	M132LU
4 000/5	2.4 Mvar	M132KV	M132LV
5 000/5	3.0 Mvar	M132KW	M132LW

Varmeters

Analogue indicator to measure reactive power

Dimensions

YMC / YTC

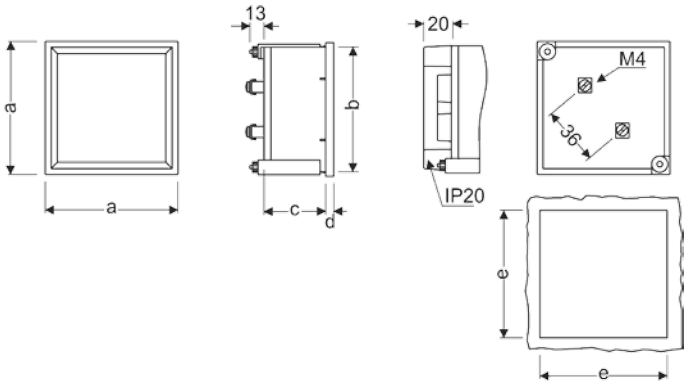

Type	a	b	c	d	e
96 E	96	91	43,5	5,7	92 +0,8
96 A / AN	96	91	57,2	5,7	92 +0,8
144	144	137	94,7	7,3	138 +1

Dimensios (mm)

Connections

YMC

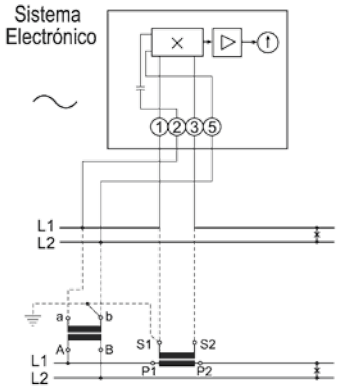

YTCE

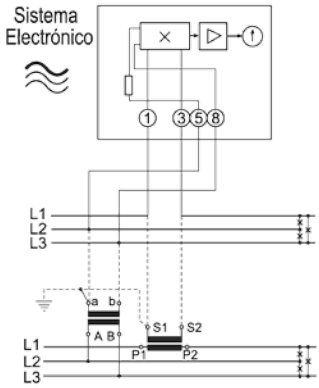

YTCA

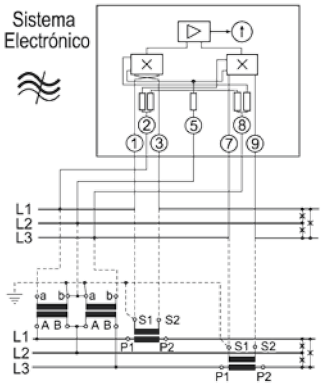

YTCAN

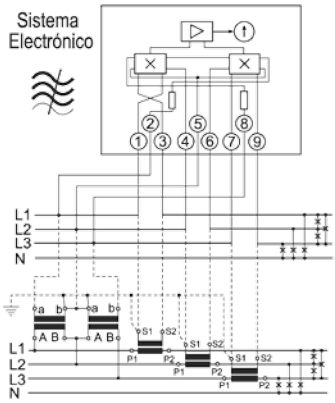

Varmeters

Analogue indicator to measure the reactive power

Coding table

Varmeters

M	1	X	X	X	X	0	0	X	X	X

Code	Internal Code	
Current input	Standard .../ 5 A	0
	... / 1 A	1
Voltage	Standard (400 V_{p-p})	0
	110 V_{p-p} (a)	1
	230 V_{p-p}	2
	440 V_{p-p}	5
	460 V_{p-p}	6
Scale range Primary current transformer	50	9
	75	B
	100	C
	150	E
	200	F
	300	H
	400	J
	500	K
	600	L
	1000	P
	1500	R
	2000	S
	3000	U
	4000	V
	5000	W

(a) For unbalanced ARON (3 wire) three-phase units, 100V is considered the standard voltage

Varmeter scales

M	1	X	X	X	X	0	0	X	X

Code	Internal Code	
Current input	Standard .../ 5 A	0
	... / 1 A	1
Voltage	Standard (400 V)	0
	110 V (a)	1
	230 V	2
	440 V	5
	460 V	6

(a) For unbalanced ARON (3 wire) three-phase units, 100V is considered the standard voltage

Electronic Phase-meters

Analogue indicator to measure cos φ

Description

- Does not need an auxiliary power supply
- DIN box with dimensions 96 and 144 mm
- Class 1.5
- Built-in electronic converter
- Balanced single and three-phase circuits

Application

Measurement of cos φ in balanced or unbalanced single and three-phase circuits.

Features

	FEM / FETC	FMZ / FTZ
Voltage circuit		
Consumption	1 V·A	4 V·A
Frequency	40 ... 70 Hz	
Overloads	1.2 U_n permanent 2 U_n during 5 s	
Current circuit		
Nominal current	... 5 A	
Consumption	1.5 V·A	0.75 V·A
Frequency	20 ... 100 Hz	
Overloads	1.2 I_n permanent 5 I_n during 30 s 10 I_n during 5 s 40 I_n during 1 s	
Accuracy	± 1.5 % FS	
Ambient conditions		
Operating temperature	+10 ... +30 ºC	
Limit temperature	- 25 ... +40 ºC	
Altitude	2000 m	
Build features		
Dimensions	See the following table	
Weight	See the following table	
Type of box	panel	
Degree of protection:		
Front panel	IP 52	
Terminals	IP 00	
Insulation voltage	2 kV, during 1 min, between the mechanism and the box	
Standards	**BS 89, EN 60051, IEC 144, UL 94, DIN 43780, IEC 51, UNE 21318**	

Electronic phase-meters

Analogue indicator to measure cos φ

References

Single-phase phase-meters 90 º

	FEMC 96	FEMC 144
Class	1,5	
Scale	90º P1 (Simple profile)	
Dimensions (mm)		
a b c	96 96 62,9	144 144 71,8
Weight (g)	480	690
V	cos φ 0.5-1-0.5	
100/√3	M13431	M13441
110/√3	M13432	M13442
100	M13433	M13443
110	M13434	M13444
230	M13435	M13445
400	M13436	M13446
440	M13437	M13447
500	M13438	M13448

Single-phase phase-meters 240 º

	FMZ 96	FMZ 144
Class	1,5	
Scale	240º P1 (Simple profile)	
Dimensions (mm)		
a b c	96 96 101,2	144 144 71,8
Weight (g)	500	710
V	cos φ 0.5-1-0.5	
100/√3	M13531	M13541
110/√3	M13532	M13542
100	M13533	M13543
110	M13535	M13545
230	M13535	M13545
400	M13536	M13546
440	M13537	M13547
500	M13538	M13548

Three-phase phase-meters 90º

	FETC 96	FETC 144
Class	1,5	
Scale	90º P1 (Simple profile)	
Dimensions (mm)		
a b c	96 96 62,9	144 144 71,8
Weight (g)	480	690
V	cos φ 0.5-1-0.5	
100/√3	-	-
110/√3	-	-
100	M1343C	M1344C
110	M1343D	M1344D
230	M1343E	M1344E
400	M1343F	M1344F
440	M1343G	M1344G
500	M1343H	M1344H

Three-phase phase-meters 240º

	FEMC 96	FEMC 144
Class	1,5	
Scale	240º P1 (Simple profile)	
Dimensions (mm)		
a b c	96 96 62,9	144 144 71,8
Weight (g)	480	690
V	cos φ 0.5-1-0.5	
100/√3	M13431	M13441
110/√3	M13432	M13442
100	M13433	M13443
110	M13434	M13444
230	M13435	M13445
400	M13436	M13446
440	M13437	M13447
500	M13438	M13448

Electronic phase-meters

Analogue indicator to measure cos φ

Dimensions

FEMC / FETC

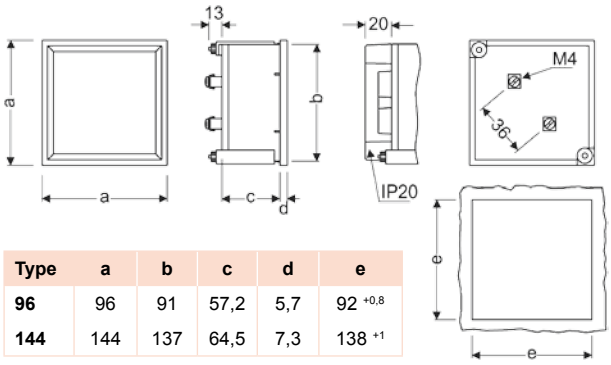

Type	a	b	c	d	e
96	96	91	57,2	5,7	92 $^{+0,8}$
144	144	137	64,5	7,3	138 $^{+1}$

Dimensions (mm)

FMZ / FTZ

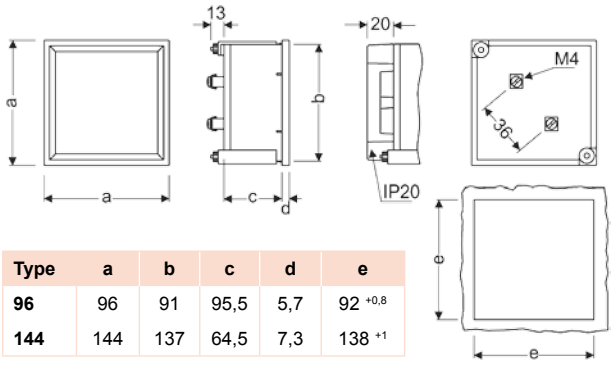

Type	a	b	c	d	e
96	96	91	95,5	5,7	92 $^{+0,8}$
144	144	137	64,5	7,3	138 $^{+1}$

Dimensions (mm)

Connections

FEMC

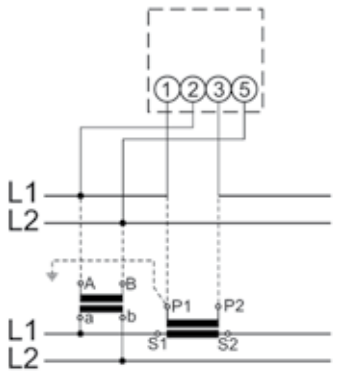

FETC

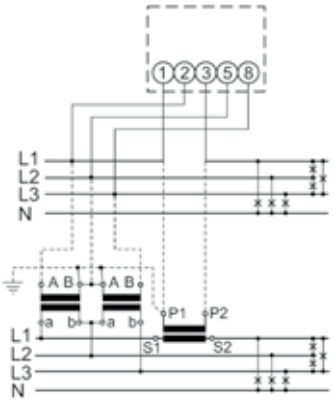

FMZ

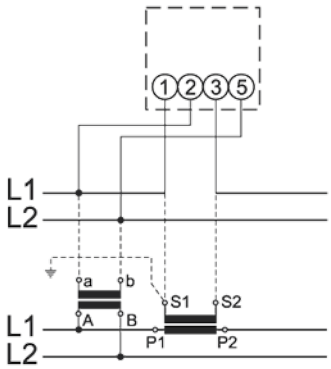

FTZ

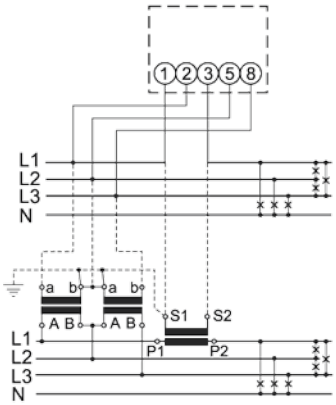

Coding table

Electronic phase-meters	M	1	X	X	X	X	0	0	X	X
	Code						Internal Code			
	Secondary current			Standard .../ 5 A					0	
				... / 1 A					1	
	Frequency			Standard (50 Hz)						0
				60 Hz						1

Induction Phase-meters

Analogue indicator to measure cos φ

Description

- Does not need an auxiliary power supply
- DIN box with dimensions 96 and 144.
- Class 1.5
- Balanced and unbalanced single and three-phase circuits.
- 4 quadrants

Application

Measurement of cosφ in balanced or unbalanced single and three-phase circuits.

Features

	PIC A / PIC B	PIC E
Voltage circuit		
Consumption	5 V·A / 20 mA	15 mA
Frequency	49.5 ... 50.5 Hz 59.4 ... 60.6 Hz	4 T - 5T 54 ... 66 Hz
Overloads	1.2 U_n permanent 2 U_n during 5 s	
Current circuit		
Nominal current	... 5 A	
Consumption	4 V·A	2.5 V·A
Frequency	20 ... 100 Hz	
Overloads	1.2 I_n permanent 5 I_n during 30 s 10 I_n during 5 s 40 I_n during 1 s	
Accuracy	± 1.5 % FS	
Ambient conditions		
Operating temperature	+10 ... +30 ºC	
Limit temperature	- 25 ... +40 ºC	
Altitude	2000 m	
Dimensions	See the following table	
Weight	See the following table	
Type of box	panel	
Degree of protection:		
Front panel	IP 52	
Terminals	IP 00	
Insulation voltage	2 kV, during 1 min, between the mechanism and the box	
Standards	**BS 89, EN 60051, IEC 144, UL 94, DIN 43780, IEC 51, UNE 21318**	

Induction Phase-meters

Analogue indicator to measure cos φ

References

Induction Phase-meters 360°, single-phase

Type	PIC 96 A	PIC 144 A
Class	1,5	
Scale	360º, P1	
Dimensions (mm)		
a	96	144
b	96	144
c	101,2	102
Weight (g)	1 910	1 960
V	cos φ 0-1-0	
110	M13631	M13641
230	M13632	M13642
400	M13633	M13643

Induction Phase-meters 360°, three-phase

	BALANCED		UNBALANCED	
Type	PIC 96 B	PIC 144 B	PIC 96 E	PIC 144 E
Class	1,5			
Scale	360º, P1			
Dimensions (mm)				
a	96	144	96	144
b	96	144	96	144
c	101,2	102	101,2	102
Weight (g)	1 410	1 460	1 410	1 460
V	cos φ 0-1-0			
110	M13634	M13644	M13637	M13647
230	M13635	M13645	M13638	M13648
400	M13636	M13646	M13639	M13649

Dimensions

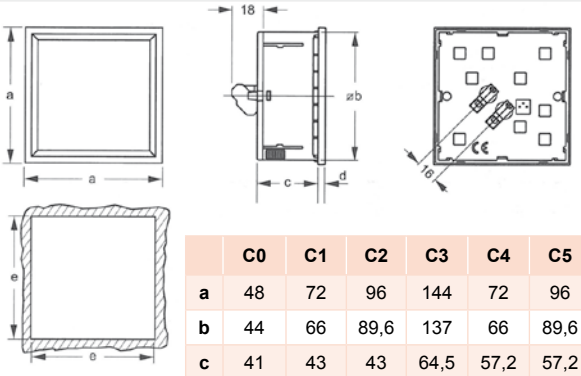

	C0	C1	C2	C3	C4	C5	C6	C7
a	48	72	96	144	72	96	96	144
b	44	66	89,6	137	66	89,6	89,6	137
c	41	43	43	64,5	57,2	57,2	95,5	94,7
d	5	5,2	5,2	7,1	5,2	5,2	5,2	7,1
e	45^{+1}	68^{+1}	92^{+1}	138^{+1}	68^{+1}	92^{+1}	92^{+1}	138^{+1}

Dimensions (mm)

Coding table

Induction Phase-meters	M	1	X	X	X	X	0	0	X
	Code						Internal Code		↑
Secondary current				Standard .../ 5 A					0
				... / 1 A					1

Connections

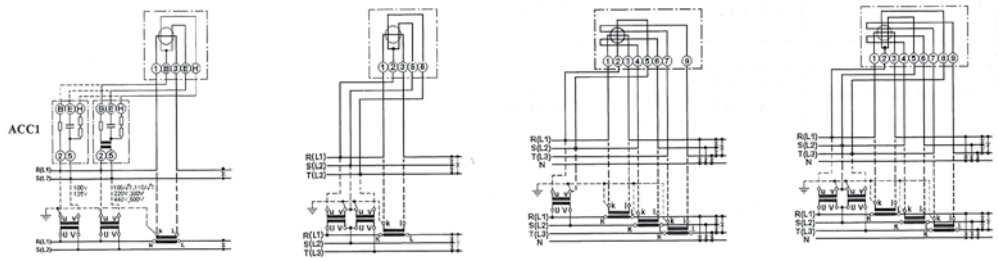

PIC 96A
PIC 144A

PIC 96B
PIC 144B

PIC 96C
PIC 144C

PIC 96E
PIC 144E

Bidirectional protection wattmeters

Analogue indicator to measure three-phase current

Description

Electronic instrument on the front panel (96x96) used to protect generators against overloads and inverse power. The instrument is composed of a power converter with an analogue output connected to the needle indicator with 2 relays. The unit measures and indicates the system's power constantly (measurement in 4 quadrants), sending an alarm signal when the power exceeds the set trip values. The alarm is indicated by activating the output relays. The two LEDS on the front panel can be used to view the status of output relays. The scale is exchangeable.

Application

- The instrument has two independent relays: an overload and an inverse power relay.

Overload protection

The protection has these characteristics:

- Trip point adjustable between 0 and 100% of the scale base power
- Hysteresis adjustable between 1 and 50% of the scale base
- Delay adjustable between 0 and 30 s
- Inverse power protection. With various generators connected in parallel, one can start consuming power and working as a motor, under determined situations ("motorization"). The relay is activated when the circumstances are met.

The protection system has the following characteristics:Trip point adjustable between 0 and 20% of the scale base power

- Delay is adjustable between 0 and 30 s.
- Relay interlocking* (latch): when the alarm condition is met, the relay is activated until the instrument's auxiliary power supply is not shut down (even when the alarm conditions disappear)
- Fault security: the relay bypass position is the same as when the alarm is triggered. Therefore, when the auxiliary power supply is shut down, the unit sends an alarm.

*: The system can be supplied with no relay interlocking (latch), on demand.

Features

	PGR
Input circuit	
Nominal current I_n	0 ... 20 mA dc
Current measurement range	0 ... 130 % I_n
Current overload	5 I_n permanent
Impedance	3 Ω
Auxiliary power supply	
Nominal value in AC	115 / 230 / 400 V
Frequency	40 ... 80 Hz
Consumption	2.5 V·A
Nominal value in DC	9-18 / 18-36 / 36-72 / 90-140 V
Consumption	2.5 V·A
Ambient conditions	
Operating temperature	+5 ... +55 ºC
Limit temperature	- 25 ... +70 ºC
Altitude	2000 m
Build features	
Dimensions (mm)	96 x 96 x 77.2
Weight (g)	435
Type of box	DIN rail
Degree of protection:	
Front panel	IP 52
Terminals	IP 20
Standards	**BS 89, EN 60051, IEC 144, UL 94, DIN 43780, IEC 51, UNE 21318**

Bidirectional protection wattmeters

Analogue indicator to measure
three-phase current

References

Single-phase wattmeters

	PGR 96 M
Converter (See catalogue M2)	CW-M
Class	1,5
Scale	90º , P2
U / I	100 ... 500 V
100...500 V ..../5 A (*)	**M14721**

Three-phase wattmeters

	PGR 96E	PGR 96A	PGR 96AN
Converter (See catalogue M2)	CW-TE	CW-TA	CW-TAN
Class	1,5		
Scale	90º , P2		
U / I	100 ... 500 V		
100...500 V ..../5 A (*)	**M14722**	**M14724**	**M14723**

Coding table

PGR Wattmeter

M	1	X	X	X	X	0	0	X	X	X
Code						Internal Code				

Scales	50	9
	60	A
	75	B
	100	C
	125	D
	150	E
	200	F
	250	G
	300	H
	400	J
	500	K
	600	L
	750	M
	800	N
	1000	P
	1200	Q
	1500	R
	2000	S
	2500	T
	3000	U
	4000	V
	5000	W
Current input	Standard (.../ 5 A)	0
	... / 1 A	1
Auxiliary power supply	Standard 220...240 V	0
	380 ... 400 V 40/60 Hz	3

Dimensions

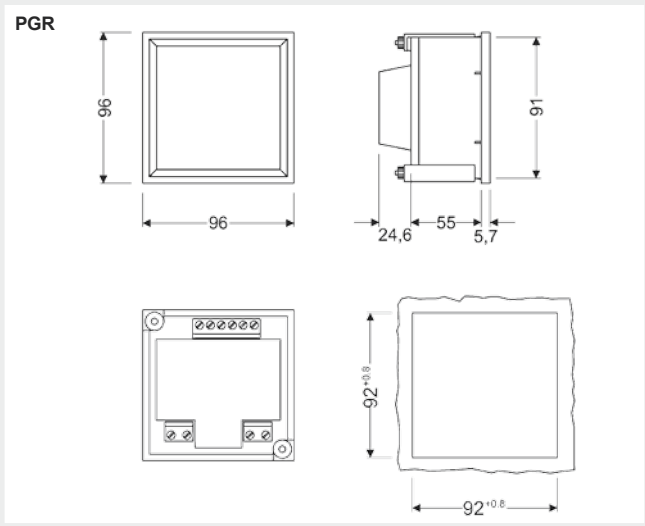

Connections

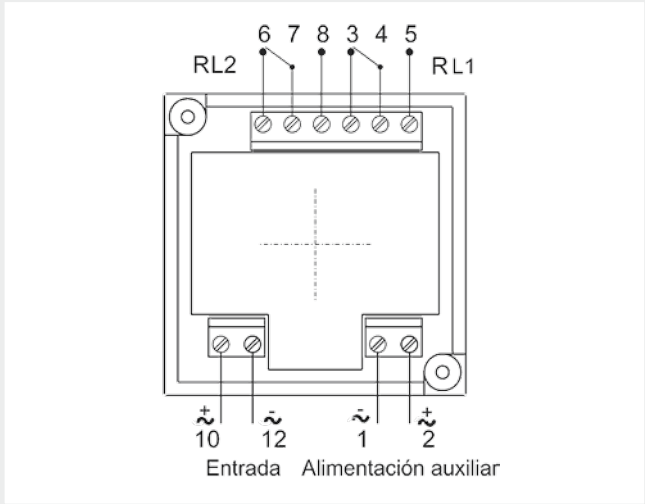

Synchronisation and marine applications equipment

2 EC / 2 HC / 2 HLC

Description

- Does not need an auxiliary power supply
- DIN box with dimensions 96 and 144 mm
- Class 1.5
- Double scale

Application

2 EC
Double moving iron voltmeter (AC)

For the measurement and comparison of alternating currents from two generators or a generator in the network, when connected in parallel.

2 HC
Double Pointer frequency-meter

For the measurement and easy comparison of frequencies in alternating current circuits coming from generators or between the network and generator, when connected in parallel.

2 HLC
Double reed frequency-meter

For the measurement and easy comparison of frequencies in alternating current circuits coming from generators or between the network and generator, when connected in parallel. The measurement is independent of the wave shape.

For applications in severe environmental and physical conditions.

Features

	2 EC	2 HC	2 HLC
Input circuit			
Consumption	1 ... 4 V·A	2 ... 3 V·A	1 ... 3.6 V·A
Working frequency	20 ... 100 Hz	depending on the type (see table)	
Overloads	1.2 U_n permanent 2 U_n during 5 s		
Measurement voltage	Standard 230 Vac Optional 100-120 Vac380-440 Vac		
Accuracy	1.5 % FS	0.5 % FS	
Ambient conditions			
Operating temperature	+10 ... +30 ºC		
Limit temperature	- 25 ... +40 ºC		
Altitude	2000 m		
Build features			
Dimensions	See the following table		
Weight	See the following table		
Type of box	panel		
Degree of protection:			
Front panel	IP 52		IP 52
Terminals	IP 00		IP 00
Insulation voltage	2 kV, during 1 min, between the mechanism and the box		
Standards	**BS 89, EN 60051, IEC 144, UL 94, DIN 43780, IEC 51, UNE 21318**		

Synchronisation and marine applications equipment

2 EC / 2 HC / 2 HLC

References

2 EC: Double voltmeter

- Class 1.5

Type	2 EC 96	2 EC 144
Class	1,5	
Scale	90º	
Dimensions (mm)		
a b c	96 96 49,2	144 144 71,8
Weight (g)	220	430
V		
2 x .../100	M13831	M13841
2 x .../110	M13832	M13842
2 x 220	M13833	M13843
2 x 380	M13834	M13844
2 x 440	M13835	M13845

2 HC: Double Pointer frequency meter

- Class 0.5
- Built-in electronic converter

Type	2 HC 96	2 HC 144
Class	0,5	
Scale	90º	
Dimensions (mm)		
a b c	96 96 62,9	144 144 71,8
Weight (g)	400	450
Hz		
45...55	M12732	M12742
57...63	M12732001	M12742001
55...65	M12732003	M12742003
45...65	M12732004	M12742004
47...63	M12732005	M12742005

2 HLC: Double reed frequency meter

- Class 0.5
- Independent measurement of the wave shape

Type	2 HLC 96	2 HLC 144
Class	0,5	
Scale	-	
Dimensions (mm)		
a b c	96 96 62,9	144 144 71,8
Weight (g)	400	450
Hz		
47...53, 13 reeds	M12932	M12942
57..0.63, 13 reeds	M12932001	M12942001
45..0.55, 11 reeds	M12932002	M12942002
55..0.65, 11 reeds	M12932003	M12942003
57..0.63, 7 reeds	M12932004	M12942004
47...53, 7 reeds	M12932005	M12942005

Coding table

Double voltmeters

M	1	X	X	X	X	0	0	X
Code						Internal Code		

Nominal scale value (Scale base)	
400 (640)	0
440 (700)	1
660 (1050)	2
1000 (1600)	3
1200 (1920)	4
2500 (4000)	5
3000 (4800)	6
3300 (5280)	7
4000 (6400)	8
5000 (8000)	9
5500 (8800)	A
6500 (10560)	B
7200(11520)	C
9000 (14400)	D
10000 (16000)	E
11000 (17600)	F
12500 (20000)	G
15000 (24000)	H
20000 (32000)	J
22000 (35200)	K
24000 (38400)	L
25000 (40000)	M

2HLC Frequency meters

M	1	X	X	X	X	0	0	X	X
Code						Internal Code			

Frequency / No. reeds	Standard (47...53 Hz/ 13 reeds)	0
	57...63 Hz / 13 reeds	1
	45..0.55 Hz / 11 reeds	2
	55...65 Hz / 11 reeds	3
Voltage	Standard (400 V)	0
	100 ... 120 V	1
	440 V	4

2HC Frequency meters

M	1	X	X	X	X	0	0	X	X
Code						Internal Code			

Frequency	Standard (45...55 Hz)	0
	57..0.63 Hz	1
	55..0.65 Hz	3
	45..0.65 Hz	4
	47...53 Hz	5
Voltage	Standard (230 V)	0
	100 ... 120 V	1
	380 ... 400 V	3
	440 V	4

Synchronisation and naval application equipment

2 EC / 2 HC / 2 HLC

Dimensions

2 EC

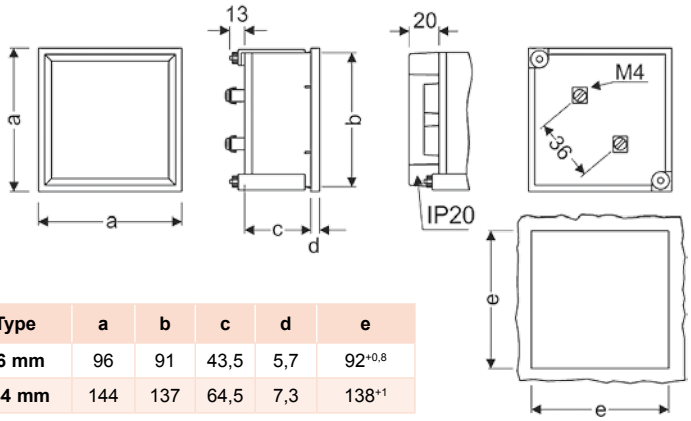

Type	a	b	c	d	e
96 mm	96	91	43,5	5,7	$92^{+0,8}$
144 mm	144	137	64,5	7,3	138^{+1}

Dimensions (mm)

2 HC / 2 HLC

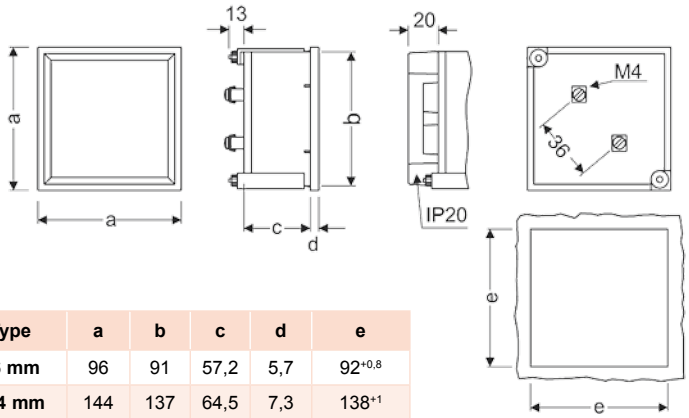

Type	a	b	c	d	e
96 mm	96	91	57,2	5,7	$92^{+0,8}$
144 mm	144	137	64,5	7,3	138^{+1}

Dimensions (mm)

Connections

2 EC / 2 HC / 2 HLC

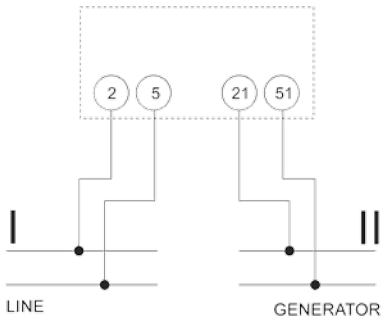

Synchronisation and marine applications equipment

SMC / STC / UC / CUC

Description

SMC / STC
Synchroscopes

- Does not need an auxiliary power supply
- DIN box with dimensions: 96 and 144 mm
- Class 1
- For single and three-phase circuits

UC / CUC
Sequence-meters

- Does not need an auxiliary power supply
- DIN box with dimensions: 72 and 96 mm
- Class 1.5
- Built-in voltage relay
- Low consumption

Features

	SMC	STC	UC	CUC
Input circuit				
Consumption	Line: 5 V·A Generator: 15 mA	Line: 20 mA per circuit Generator: 15 mA per circuit	3 mA	4 V·A
Frequency	20 ... 100 Hz		50 Hz	
Overloads	1.2 U_n permanent 2 U_n during 5 s			
Measurement voltage	Standard 230 Vac Optional 100-120 Vac380-440 Vac			
Accuracy	1.5 % FE			
Ambient conditions				
Operating temperature	+ 10 ... + 30 ºC			0 ... 70 ºC
Front panel	- 25 ... + 40 ºC			- 40 ... + 70 ºC
Altitude	2000 m			
Build features				
Dimensions	See the following table			
Weight	See the following table			
Type of box	panel			
Degree of protection:				
Front panel	IP 52			IP 52
terminals	IP 00			IP 00
Insulation voltage	2 kV, during 1 min, between the mechanism and the box			
Standards	**BS 89, EN 60051, IEC 144, UL 94, DIN 43780, IEC 51, UNE 21318**			

Synchronisation and marine applications equipment

SMC / STC / UC / CUC

Application

SMC / STC
Synchroscopes

To provide a correct reading of the difference between the frequency and phase angle between two generators or a generator and the network, when connected in parallel. When the difference is zero, the instrument's needle does not move from the synchronisation mark located in the centre of the scale.

The instrument scale is divided in two areas marked with the (+) and (-) signs. These signs indicate whether the machine being connected has a higher or lower frequency that the other one, respectively.

Synchronism is achieved when the needle is on the (-) side, slowly turning towards (+).

The needle of the instrument starts to turn in the correct direction when the difference in frequencies is 1.5 Hz for three-phase systems or 0.5 Hz for single-phase systems .

References

SM / STC: Single-phase synchroscopes

Type		SMC 96	SMC 144
Class		1,5	
Dimensions (mm)			
	a	96	144
	b	96	144
	c	101,2	102
Weight (g)		1700	2250
V			
110		M14431	M14441
230		M14432	M14442
400		M14433	M14443
500		M14434	M14444

SM / STC: Three-phase synchroscopes

Type		STC 96	STC 144
Class		1,5	
Dimensions (mm)			
	a	96	144
	b	96	144
	c	101,2	102
Weight (g)		1410	1960
V			
110		M14435	M14445
230		M14436	M14446
400		M14437	M14447
500		M14438	M14448

UC / CUC
Sequence-meters

The **UC 72** and **UC 96** types indicate the order of three-phase systems.

The **CUC 96** type indicates the sequence of phases and it has a built-in relay with a switched and voltage-free contact. The relay is deactivated in the absence of voltage or when the order of phases is incorrect.

A fully electronic circuit, with no moving parts, for the activation of neon indicators.

- Scales:

A GREEN and RED display indicate whether the phase sequence is CORRECT or INCORRECT, respectively.

UC / CUC: Sequence-meters


Type		UC 72	UC 96	CUC 96
Control relay		NO		YES
Dimensions (mm)				
	a	72	96	96
	b	72	96	96
	c	62,9	62,9	62,9
Weight (g)		200	275	375
V				
100...500 V		M13721	M13731	-
230		-	-	M13734
400		-	-	M13735

Synchronisation and marine applications equipment

SMC / STC / UC / CUC

Coding table

Synchroscopes and sequence-meters									
	M	1	X	X	X	X	0	0	X
	Code						Internal Code		↑
	Frequency			Standard (50 Hz)					0
				60 Hz					1

Dimensions

SMC / STC

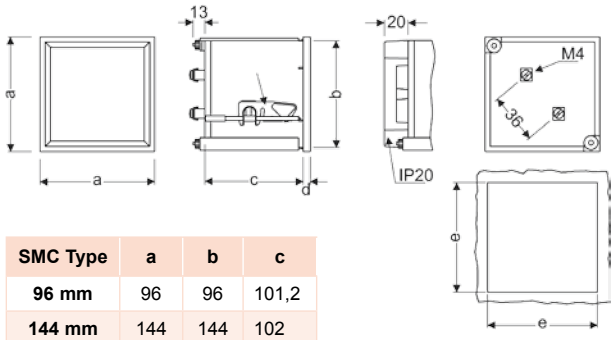

SMC Type	a	b	c
96 mm	96	96	101,2
144 mm	144	144	102

Dimensions (mm)

STC Type	a	b	c
96 mm	96	96	101,2
144 mm	144	144	102

Dimensions (mm)

UC / CUC

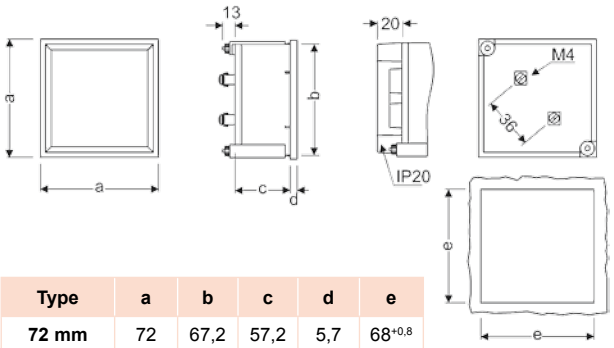

Type	a	b	c	d	e
72 mm	72	67,2	57,2	5,7	$68^{+0,8}$
96 mm	96	91	57,2	5,7	$92^{+0,8}$

Dimensions (mm)

Connections

SMC

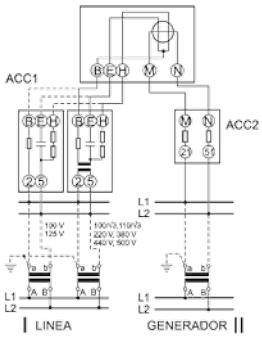

STC

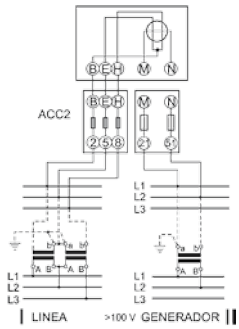

UC

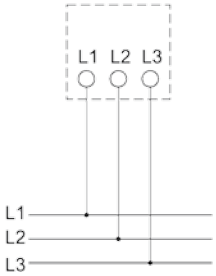

CUC

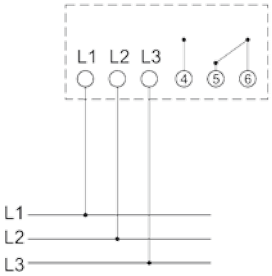

Synchronisation and marine applications equipment

Synchro MAX / Synchro MAX PID

Synchro MAX / Synchro MAX PID

Equipment used to synchronise a generator with the network

Description

- All parameters can be programmed on the keyboard on the front panel.
- Digital unit with 4-digit display and 30 auxiliary LEDs.
- Voltage, generator frequency and network measurement and display (TRMS), including the unbalance between the generator and the network.
- Automatic synchronisation by simply programming the contactor closing time.
- Wide range of frequencies (35...80 Hz)
- Standard power supply: 110, 230 and 400 V ac
- 2 operating modes: Manual, automatic and assisted
- Digital adjustment (without potentiometers)
- PI / PID CONTROL (depending on the type) OF THE SPEED OF THE GENERATOR WITH BUILT-IN PULSE OUTPUT
- Protection with password.

Features

Auxiliary power supply	Alternating voltage
Standard values	110, 230, 400 V ac (-10 / +15 %)
Frequency margin	35 ... 450 Hz
Maximum consumption	10 V·A
Measurement circuit	
Measurement range	30 ... 150 V, 110 ... 600 V
Frequency	35 ... 80 Hz
Overload (permanent)	800 V
Consumption	< 500 uA
Accuracy	
Voltage (R.M.S.)	Cl 1 +/- 2 dig.
Frequency	+/- 0.01 Hz
Phase angle	+/- 0.5 º
Display	4 digits
Colour	Red, high efficiency
Presentation cycle	2 / s
Auxiliary LEDs	30
Ambient conditions	
Storage temperature	- 40 ... +70 ºC
Operating temperature	-10 ... + 65 ºC
Altitude	2000 m
Build features	
Box colour	Grey anthracite
Box material	Self-extinguishing ABS
Degree of protection	Front panel IP 54 (optional IP 65)
Weight	0.35 kg
Insulation voltage	2 kV, during 1 min, between the mechanism and the box
Standards	
BS 89, EN 60051, IEC 144, UL 94, DIN 43780, IEC 51, UNE 21318	

Synchronisation and marine applications equipment

Synchro MAX / Synchro MAX PID

Unit's front panel

Analogue simulation

Low frequency

High frequency

Enable

4 digit indicator

Frequency margin OK

Voltage margin OK

Measurements displayed	
Phase	φ
Main voltage	V_{BB}
Generator voltage	V_{GEN}
Earth leakage voltage	V %
Main frequency	Fr_{BB}
Generator frequency	Fr_{GEN}
Frequency difference	FR %

Application

SynchroMax is a synchronism relay that has been designed to synchronise a generator with the network or with another generator used as reference. We can connect both in parallel in emergency or support applications when a greater power is needed.

Description

CIRCUTOR has two types of synchronism relays: **SYNCHRO MAX** and **SYNCHRO MAX PID**.

Synchro Max

Synchro Max is capable of adapting the generator's frequency with an integrated PI regulation algorithm, in order to connect it in parallel to the electrical network. In addition, it can be used to measure and display the voltage, phase and frequency parameters of the generator and network, as well as its differences.

Synchro Max PID

Synchro Max PID offers excellent standard **Synchro Max** measurement, display and programming features, with a powerful PID algorithm to control the generator's frequency.

This type of control turns **Synchro Max PID** into a quick synchronisation device and, therefore, it offers the ideal solution to reduce synchronisation costs, since it minimises the time invested in such procedures.

This type of control is perfect for small-scale hydraulic power plants, among many other applications.

Here is an example of how SYNCHRO MAX moves forward to a time t_{brk} (previously programmed by the user) to take into account the connection delay of the generator's contactor.

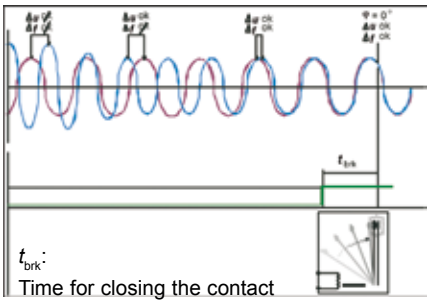

Synchronisation and marine applications equipment

Synchro MAX / Synchro MAX PID

References

Type	SYNCHRO MAX	SYNCHRO MAX PID
PID Control	No	Yes
Frequency	30 ... 70 Hz	
Dimensions (mm)		
a b c	96 96 62,9	
$V_{measurement}$		
30 ... 150	M14624	M14634
110 ... 600	M14625	M14635

Coding table

Synchro MAX	M	1	X	X	X	X	0	0	X
	Code						Internal Code		↑
	Voltage power supply			Standard (400 V)					0
				110 V					1
				230 V					2

Dimensions

SYNCROMAX

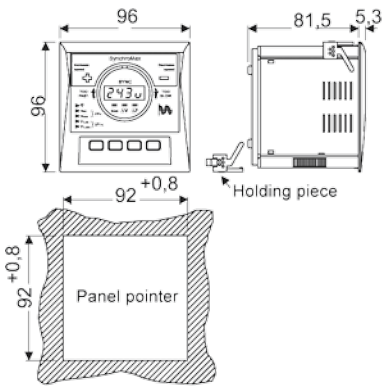

Connections

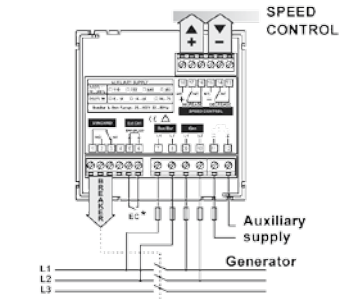

* EC (External Control): The connection being opened disables the synchronisation relay (breaker)

MEG-1000

Insulation resistance meter

Description

- Does not need an auxiliary power supply
- DIN box, with dimensions: 96x96
- Class 1.5
- Neutral insulated or impedance systems (IT network)

Application

MEG-1000 measures and controls the insulation resistance between phase and earth in a neutral insulated or impedance line (IT), with the use of relays. The insulation resistance can be displayed with a galvanometric indicator located on the front of the unit.

To carry out the measurements, the unit applies a continuous voltage of 24 V between the phase and earth, measuring the leakage current circulating through the network insulation resistors. This current determines the insulation resistance.

The unit has two timed output relays, one acts as the maximum (triggered when the insulation resistance is lower than a determined value). In both relays, the trip point and connection delay time can be adjusted with potentiometers located on the back of the unit.

When the insulation resistor is within the maximum and minimum values defined with the potentiometers, the NORMAL LED will be lit on the front panel. When the resistor is out of the margins defined, either exceeding or not reaching the normal levels, the ALARM LED will be lit on the front panel.

Features

Input circuit	
Consumption	5 V·A
Frequency	20 ... 100 Hz
Overloads	1.2 U_n permanent 2 U_n during 5 s
Accuracy	1.5 % FS
Ambient conditions	
Operating temperature	+ 10 ... +30 ºC
Limit temperature	- 25 ... + 40 ºC
Altitude	2000 m
Build features	
Dimensions	See the following table
Weight	See the following table
Type of box	panel
Terminal protection degree	IP 00
Box protection degree	IP 52
Weight	0.35 kg
Insulation voltage	2 kV, during 1 min, between the mechanism and the box
Standards	
BS 89, EN 60051, IEC 144, UL 94, DIN 43780, IEC 51, UNE 21318	

MEG-1000

Insulation resistance meter

References

Type	MEG-1000
Class	1,5
Scale	90 º
Frequency	50 ... 60 Hz
Dimensions (mm)	
a b c	96 96 73,8
Weight (g)	0,708
Ω (double scale)	0 ... 500 kΩ 0.5 ... 5 MΩ
Code	M15051

Dimensions

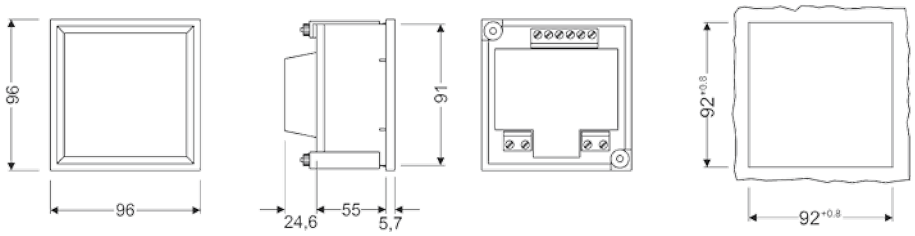

Connections

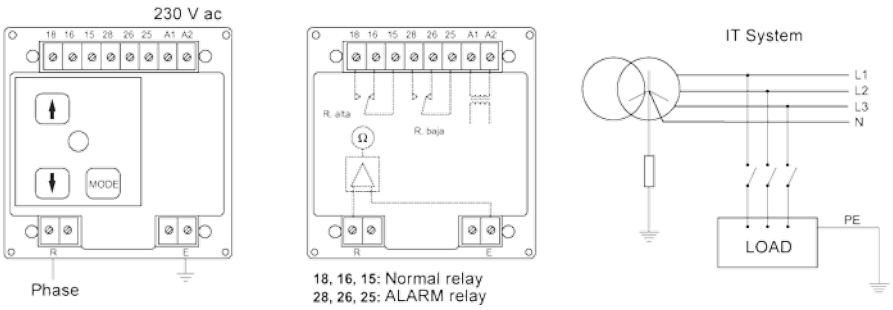

CH

Hours run meter

Description

Application

- Timers are used to measure time with a simple, easy and reliable system.
- Measurement of start-up and operating times.
- Modification and operating times.
- Production and quantity times.
- Data to provide information about the following:

Features

Input circuit	
Current	10 mA
Frequency	50 or 60 Hz
Display	Mechanical
Digits	1,5 x 3.5 mm with magnifier
Maximum value	99 999,99
Ambient conditions	
Operating temperature	+10 ... +30 ºC
limit temperature	-25 ... +40 ºC
Type of box	panel
Terminal protection degree	IP 00
Box protection degree	IP 52
Weight	0.35 kg
Insulation voltage	2 kV, during 1 min, between the mechanism and the box
Standards	**BS 89, EN 60051, IEC 144, UL 94, DIN 43780, IEC 51, UNE 21318**

CH

Hours run meter

References

Type	CH 48	CH 72	CH 96	CH 45
Class	1,5			
Display	5 + 2			5 + 1
Dimensions (mm)				
a	48	72	96	90
b	48	72	96	36
c	48	62,9	62,9	55
Weight (g)	50	125	180	75
Code	M14911	M14921	M14931	M14951

Coding table

Timer	M	1	X	X	X	X	0	0	X	X
	Code						Internal Code			
	Frequency			Standard 50 Hz					0	
				60 Hz					1	
	Voltage			Standard (230 V)						0
				24 V ac						6
				110 V ac						1
				10..0.80 V dc						8
				80...200 V dc						A

Dimensions

CH 48

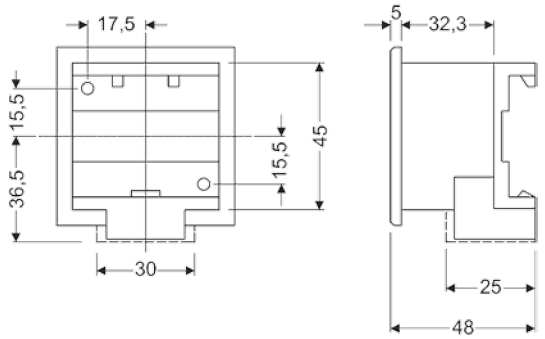

CH 72 / CH 96

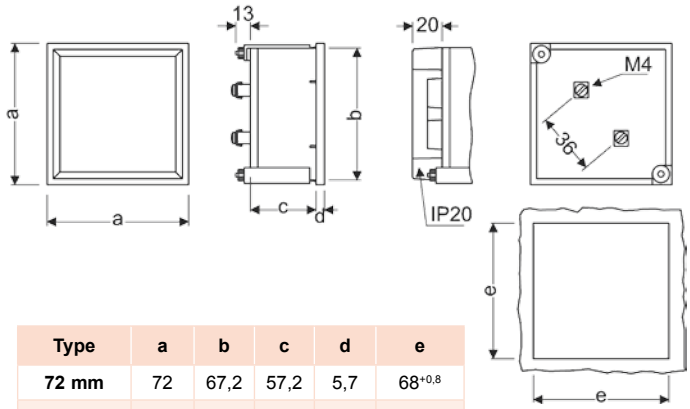

Type	a	b	c	d	e
72 mm	72	67,2	57,2	5,7	$68^{+0,8}$
96 mm	96	91	57,2	5,7	$92^{+0,8}$

Dimensions (mm)

Connections

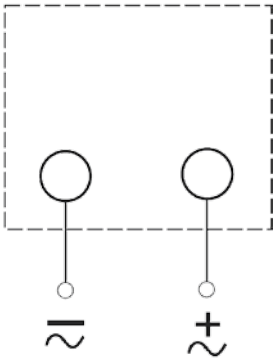

CH 45

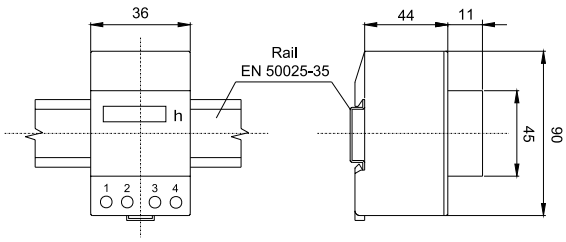

CIRCUTOR

Accessories

Accessory

Terminal cover

Type	72 x 72 mm	96 x 96 mm	144 x 144 mm
Code	M19922	M19923	M19924

Accessory

IP protection

Type	48 x 48 mm	72 x 72 mm	96 x 96 mm	144 x 144 mm
IP 54	M19931	M19932	M19933	M19934
IP 65	M19941	M19942	M19943	M19944

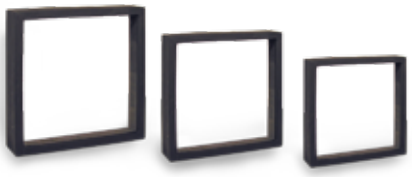

Options

Tropicalized, only on the panel
Externally regulated pointer
Anti-reflection glass
Makrolon Glass
Interior lighting (6 - 12 - 48 Vdc) panel only
Prolongation of scales 1; 1.2; 2; 3; 4; 5; 6
Central zero
Shifted zero

Coding table

M	1	X	X	X	X	0	0	X	X	X	X	X
Code						Internal Code					↑	↑
Other options			Tropicalized, only on the panel								0	1
			Externally regulated pointer								0	2
			Anti-reflection glass								0	3
			Makrolon Glass								0	4
			Interior illumination (6-12-48 Vdc) only on the panel								0	5
			Tropicalized + anti-reflection glass								0	6
			Tropicalized + Makrolon glass								0	7