CONSOLE SYSTEMS

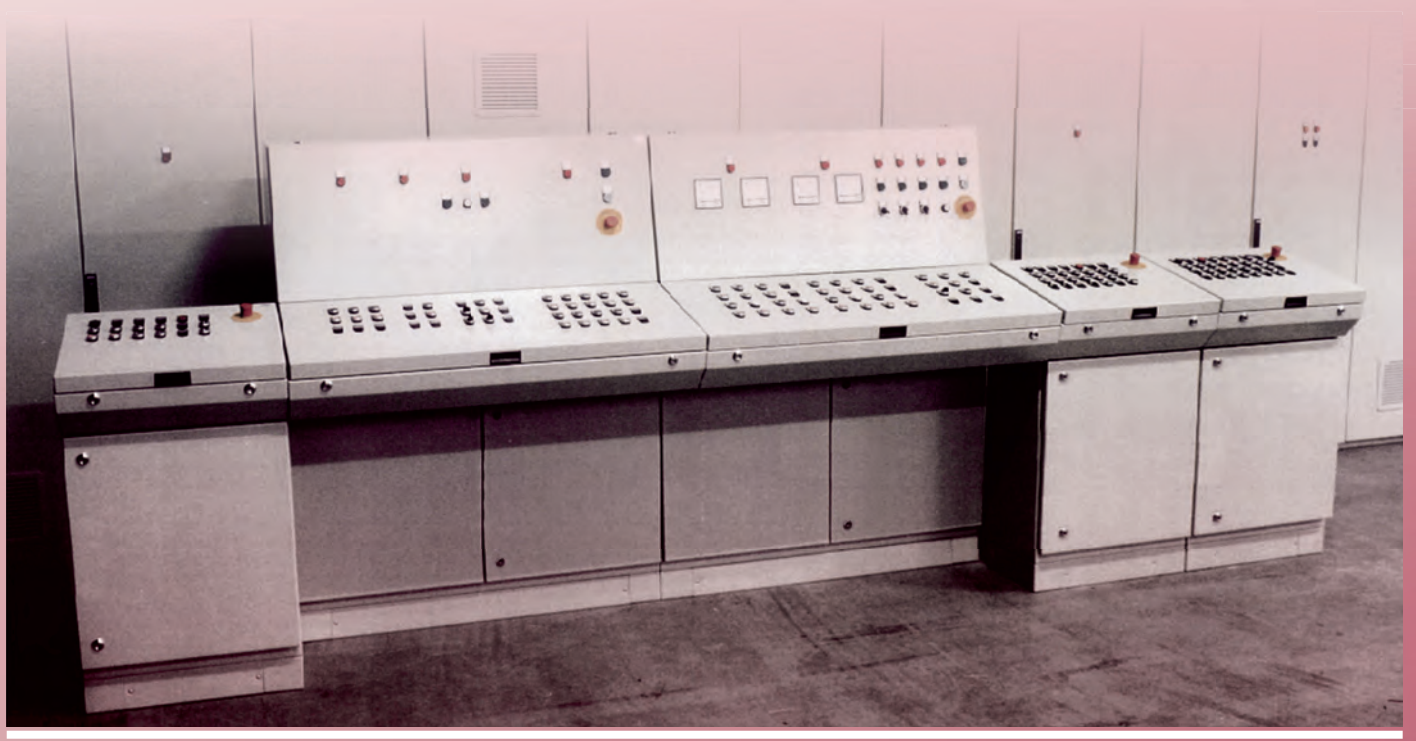

MPG 144
mild steel

Single door:
IP 66, NEMA 4, 12, 13
Double door:
IP 55, NEMA 12

H: 985
W: 600-1600
D: 400

MPC 146
mild steel

Single door:
IP 66, NEMA 4, 12, 13;
Double door:
IP 55, NEMA 12,13

Top Section
H: 500
W: 600-1600
D: 494
Desk
H: 250
W: 600-1600
D: 985
Base unit
H: 700
W: 600-1600
D: 500

MPGS 150
stainless steel

Single door:
IP 66, NEMA 4x,12,13;
Double door:
IP 55, NEMA 12,13

H: 985
W: 600-1200
D: 400

MPCS 152
stainless steel

Single door:
IP 66, NEMA 4x, 12, 13
Double door:
IP 55, NEMA 12

Top Section
H: 500
W: 600-1600
D: 494
Desk
H: 250
W: 600-1600
D: 985
Base unit
H: 700
W: 600-1600
D: 500

Accessories

Plinths 156
Mounting plates 157
Panels and lids 158
Profiles 159

General Accessories 286

Mild steel and stainless steel
console systems

- Surface mounted doors and panels with injencted one-piece gaskets.
- Integral handle to aid lifting.
- Hinges are now mounted outside the aperture to simplify re-hinging of the door even if the enclosure is fully equipped.
- The mounting plate position can easily be adjusted in depth, in 12.5 mm steps, with the accessory MPGDA.
- Door may be either right or left hand opening.
- Bottom gland plates included.
- Approvals and certifications

MPG

One-piece consoles in mild steel

The MPG simple but effective one-piece console is available in five sizes. The top desk panel is held open by a self-engage/ self-release mechanical panel stay and combines with the removable rear panel and front door, to ensure convenient access. A range of 19" accessories adds further versatility.

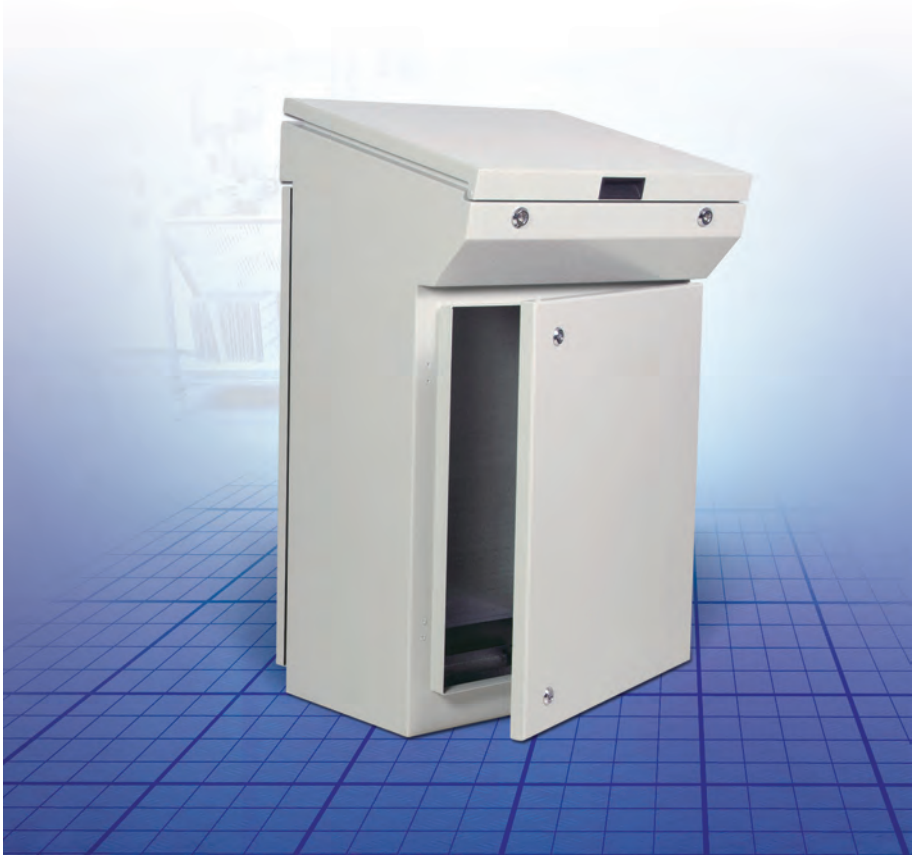

IP 66/NEMA 4,12,13;
IP 55/ NEMA 12, 13

Technical data

Material: MPG: Body and door: 1.5mm mild steel. Rear panel 1.5mm mild steel. Bottom plates 1.2mm galvanized steel. Mounting Plate 2.5mm galvanized steel.
Body: Folded and seam welded. Integrated plinth.
Doors and panels: Single folded surface mounted with hinges allowing left and right-hand opening to base door. Angle 12° from horizontal. Concealed hinges on top edge allow 80° opening. Panel held open by self engage/self release mechanical panel stay. Double doors on 1200 and 1600 mm wide base units.
Mounting plate: Standard mounting plate in base unit.
Cable inlet: Bottom opening for cable access. Bottom plate for cable glanding supplied as standard.
Lock: Double-bit 3mm locks for top panel. For base, two double-bit 3mm locks. Other options available. See wall mounting section.
Earthing: M8 threaded studs on body, door, top panel and rear panel.
Finish: RAL 7035 structure powder coating.
Protection: Single door: IP 66/NEMA 4, 12 13 Double doors: IP 55/NEMA 12 and 13.
Delivery: Mounting plate and suitable nuts and washers for earthing. The console is delivered on a wooden pallet.

MPG, IP 66/NEMA 4,12,13; IP 55/ NEMA 12, 13

Mild steel

H	W	D	h	w	Usable depth	Part No.
985	600	400	790	499	333	MPG06R5
	800	400	790	699	333	MPG08R5
	1000	400	790	899	333	MPG10R5
	1200	400	790	1099	333	MPG12R5
	1600	400	790	1499	333	MPG16R5

Note: Only 1200 and 1600 wide consoles have double doors.

Dimensions

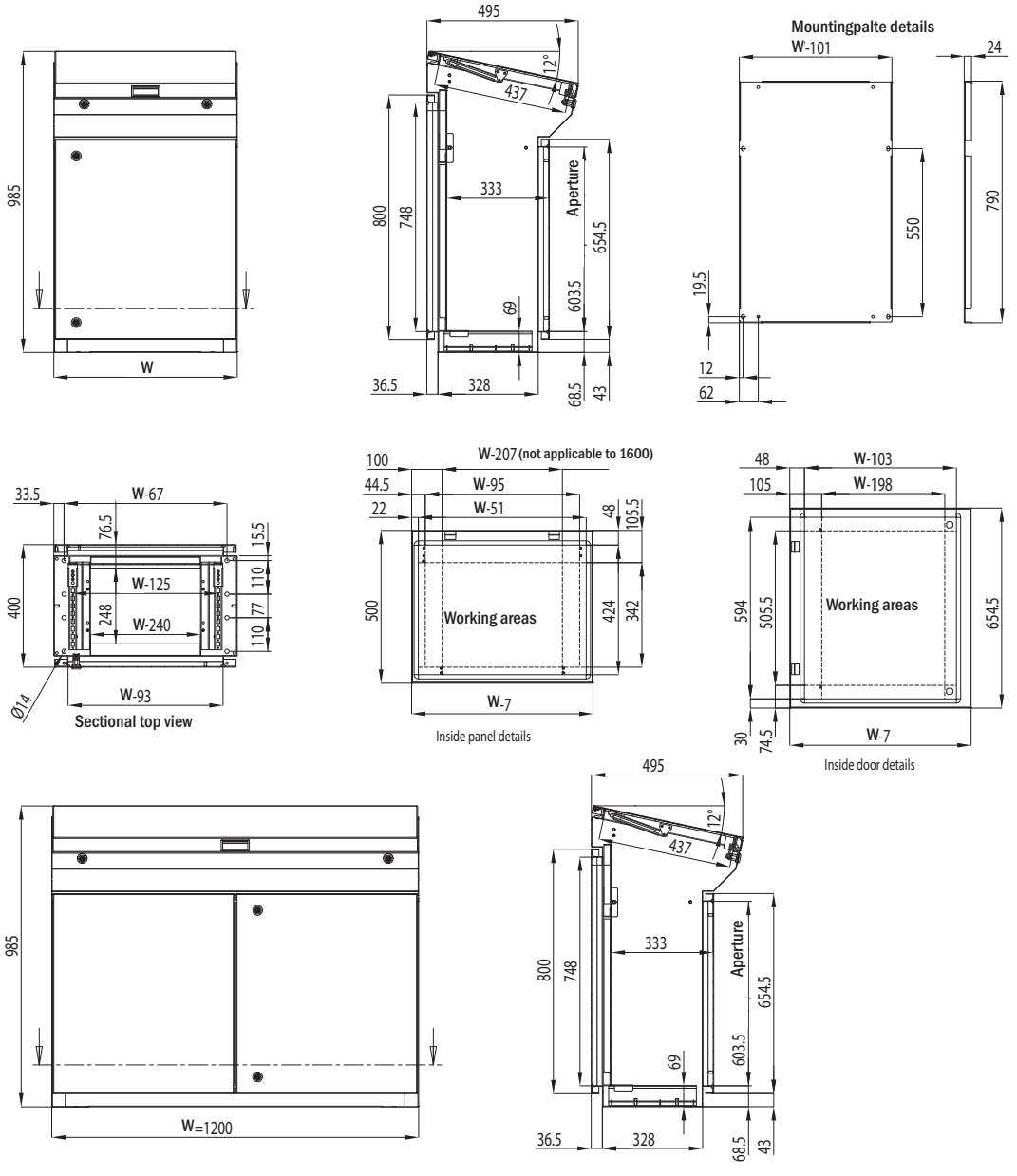

MPC

Console system

Flexible console system, allows a versatile number of combinations to configure the system to your design. The top section and desk panels are held open by a self-engage/self-release mechanical panel stay and combines with the top removable rear panel and front door, to ensure convenient access. A range of 19" accessories adds further versatility. The MPC range is fully compatible with the stainless steel MPCS units, providing additional protection if required.

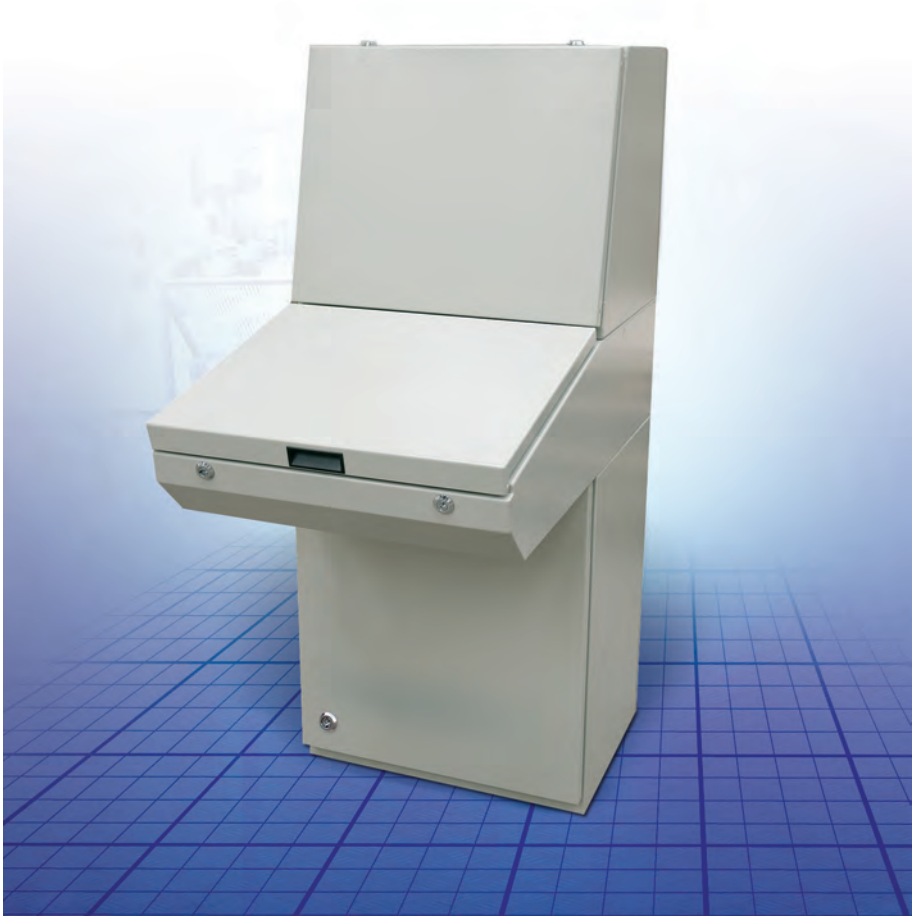

IP 66/NEMA 4, 12, 13;
IP 55/ NEMA 12,13

Technical data

Material: Body and door: 2.0mm mild steel. Rear panel 1.5mm mild steel. Bottom plates: 1.2mm galvanized steel.
Mounting plate: 2.5 mm galvanized steel.
Body: Folded and seam welded. Integrated plinth.
Doors and panels: Single folded surface mounted with hinges allowing left and right-hand opening to base door. Top section and desk panels held open by self engage/self release mechanical panel stays. Concealed hinges allowing 90° opening on the desk. Double doors on 1200 and 1600 mm wide base units.
Mounting plate: Standard in base unit. Fixed by fixing brackets on C rail, top and bottom for depth adjustment. Optional in desk and top section units.
Lock: Double-bit 3mm locks for top section and desk unit. For base, two double-bit 3mm locks. Other options available, see wall mounting section.

Cable access: Bottom opening in base unit for cable access. Bottom plates for cable glanding supplied as standard.
Earthing: M8 threaded studs on bodies, doors and rear panels.
Finish: MPC: RAL 7035 structure powder coating.
Protection: MPC single door: Corresponds with IP 66 and NEMA 4, 12 and 13.
MPC double door: Corresponds with IP 55 and NEMA 12 and 13.
Delivery: The base unit is provided with a mounting plate as standard. Desk and top section units have mounting plates provided as accessories. All top and base apertures can be closed by choosing the appropriate accessory plate. Suitable nuts and washers for the various earthing studs are provided.

MPC, IP 66/NEMA 4, 12, 13; IP 55/ NEMA 12,13

Top section units
Mild steel

H	W	D	Part No.
500	600	494	MPC061R5
	800	494	MPC081R5
	1000	494	MPC101R5
	1200	494	MPC121R5
	1600	494	MPC161R5

Desk units
Mild steel

H	W	D	Part No.
250	600	985	MPC062R5
	800	985	MPC082R5
	1000	985	MPC102R5
	1200	985	MPC122R5
	1600	985	MPC162R5

Base units with mounting plate
Mild steel

H	W	D	h	w	Usable depth	Part No.
700	600	500	590	499	470,5	MPC063R5
	800	500	590	699	470,5	MPC083R5
	1000	500	590	899	470,5	MPC103R5
	1200	500	590	1099	470,5	MPC123R5
	1600	500	590	1499	470,5	MPC163R5

Note: Only 1200 and 1600 wide consoles have double doors.

Dimensions

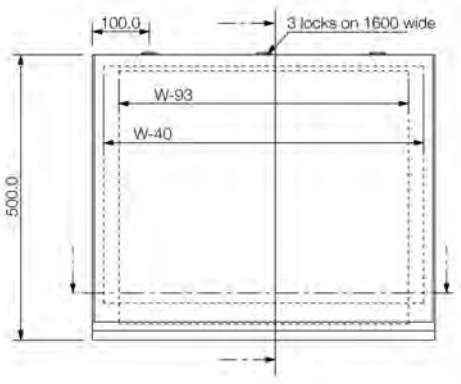
100.0
3 locks on 1600 wide
W-93
W-40
500.0

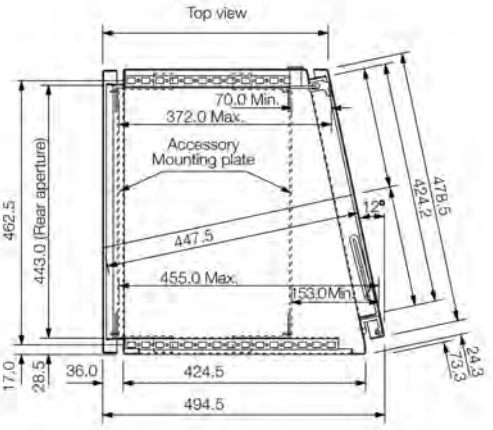
Top view
70.0 Min.
372.0 Max.
Accessory Mounting plate
462.5
443.0 (Rear aperture)
12°
447.5
455.0 Max.
153.0 Min.
478.5
424.2
24.3
17.0
28.5
36.0
424.5
494.5

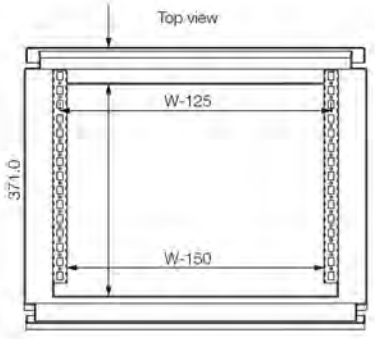
Top view
W-125
W-150
371.0

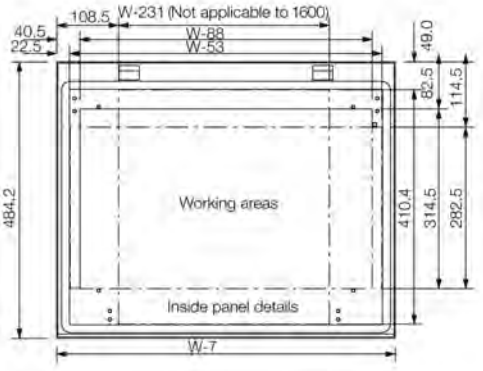
108.5
W-231 (Not applicable to 1600)
40.5
22.5
W-88
W-53
49.0
82.5
114.5
484.2
Working areas
410.4
314.5
282.5
Inside panel details
W-7

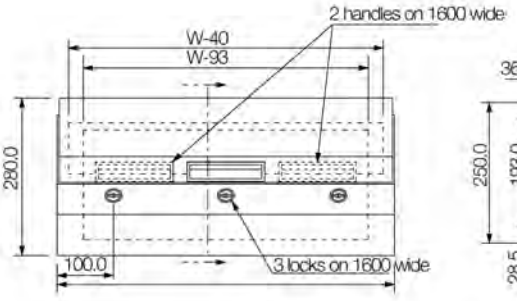
2 handles on 1600 wide
W-40
W-93
280.0
100.0
3 locks on 1600 wide

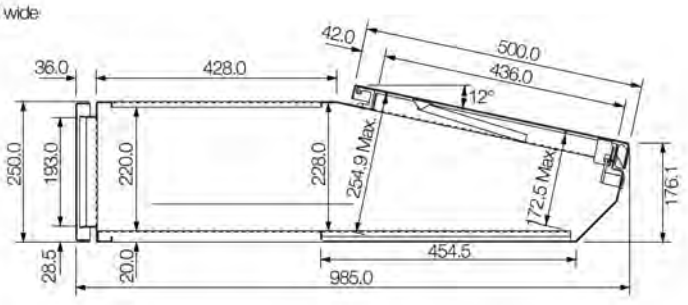
42.0
500.0
436.0
36.0
428.0
12°
250.0
193.0
220.0
228.0
254.9 Max.
172.5 Max.
176.1
28.5
20.0
454.5
985.0

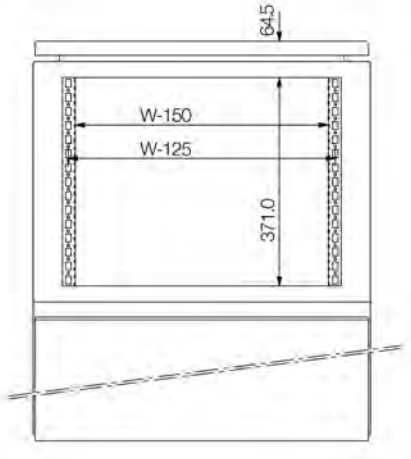
64.5
W-150
W-125
371.0

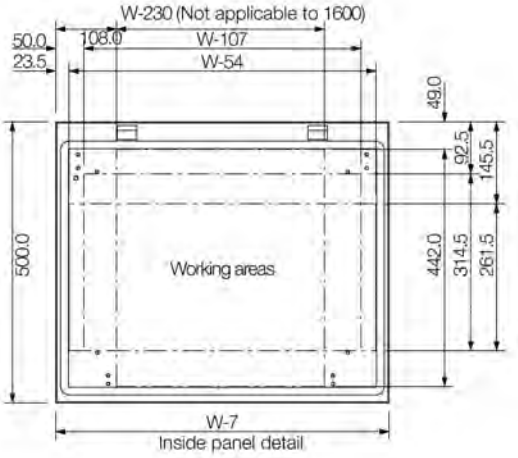
W-230 (Not applicable to 1600)
50.0
23.5
108.0
W-107
W-54
49.0
92.5
145.5
500.0
Working areas
442.0
314.5
261.5
W-7
Inside panel detail

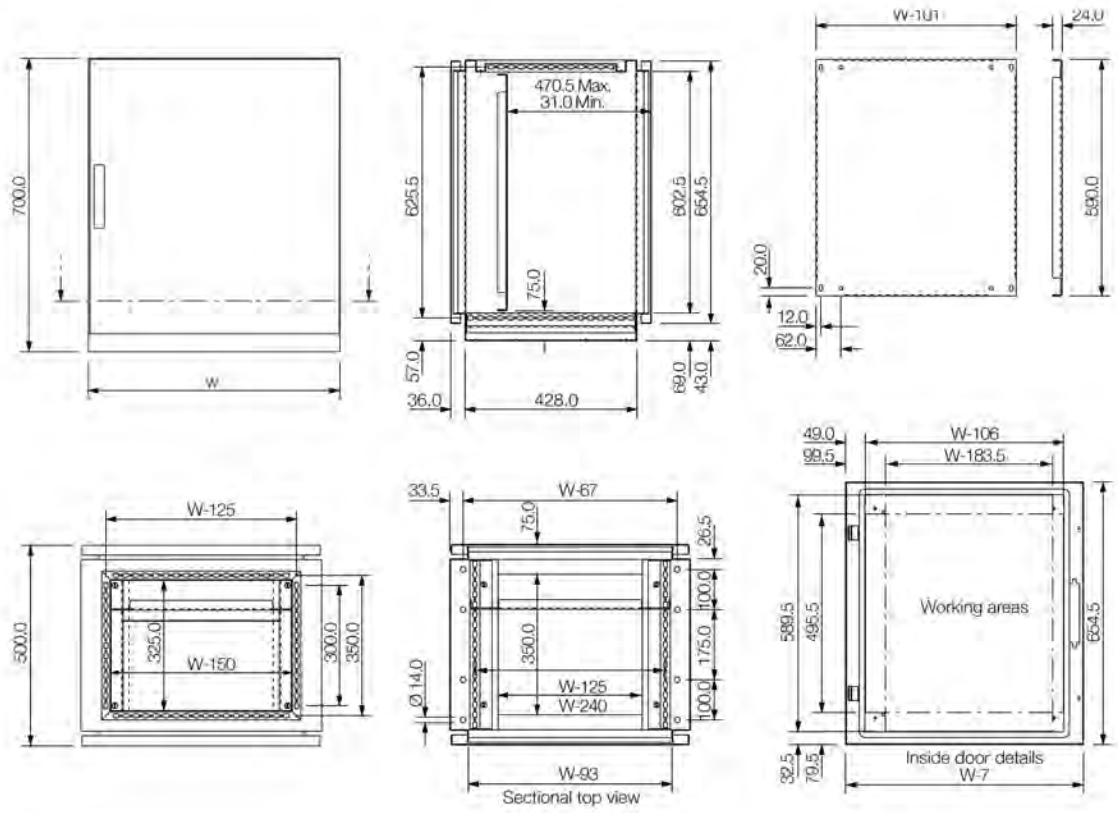
W-101
24.0
470.5 Max.
31.0 Min.
700.0
625.5
602.5
654.5
75.0
590.0
20.0
12.0
62.0
57.0
36.0
428.0
69.0
43.0
W
49.0
99.5
W-106
W-183.5
W-125
33.5
W-67
75.0
26.5
500.0
325.0
W-150
300.0
350.0
100.0
175.0
Ø 14.0
W-125
W-240
589.5
495.5
Working areas
654.5
W-93
Sectional top view
32.5
79.5
Inside door details
W-7

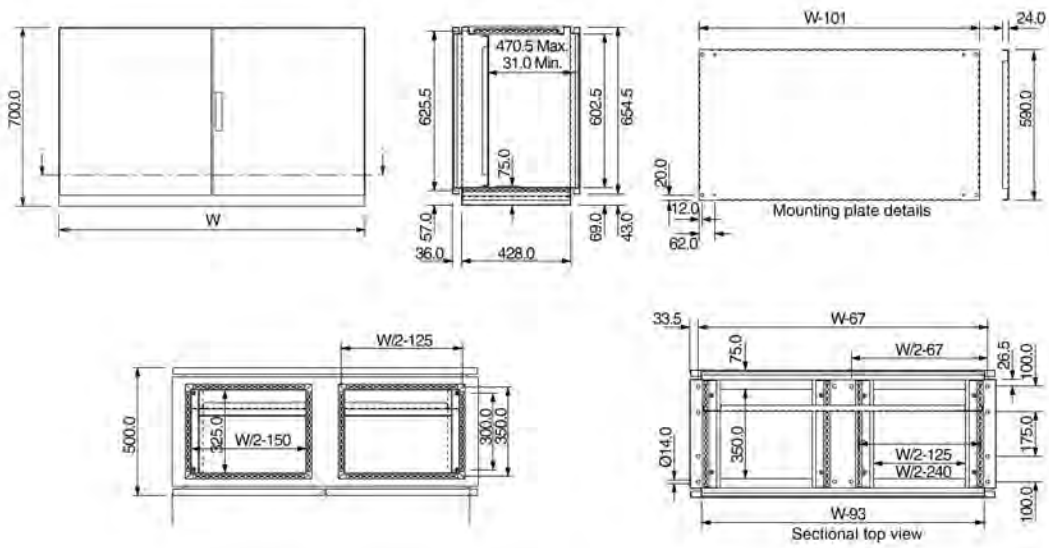
W-101
24.0
470.5 Max.
31.0 Min.
700.0
625.5
602.5
654.5
75.0
590.0
20.0
12.0
62.0
Mounting plate details
57.0
36.0
428.0
69.0
43.0
W
W/2-125
33.5
W-67
75.0
W/2-67
26.5
100.0
500.0
325.0
W/2-150
300.0
350.0
Ø14.0
350.0
175.0
W/2-125
W/2-240
100.0
W-93
Sectional top view

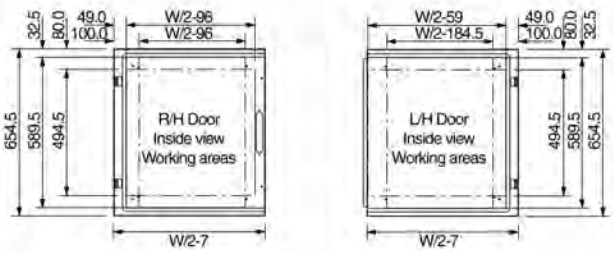
32.5
80.0
49.0
100.0
W/2-96
W/2-96
654.5
589.5
494.5
R/H Door
Inside view
Working areas
W/2-7
W/2-59
W/2-184.5
49.0
100.0
80.0
32.5
494.5
589.5
654.5
L/H Door
Inside view
Working areas
W/2-7

MPGS

One-piece consoles in stainless steel

The MPGS simple but effective one-piece console is available in five sizes. The top desk panel is held open by a self-engage/ self-release mechanical panel stay and combines with the removable rear panel and front door, to ensure convenient access. The MPGS range provides high corrosion resistance and is the ideal solution for harsh environments. A range of 19" accessories adds further versatility.

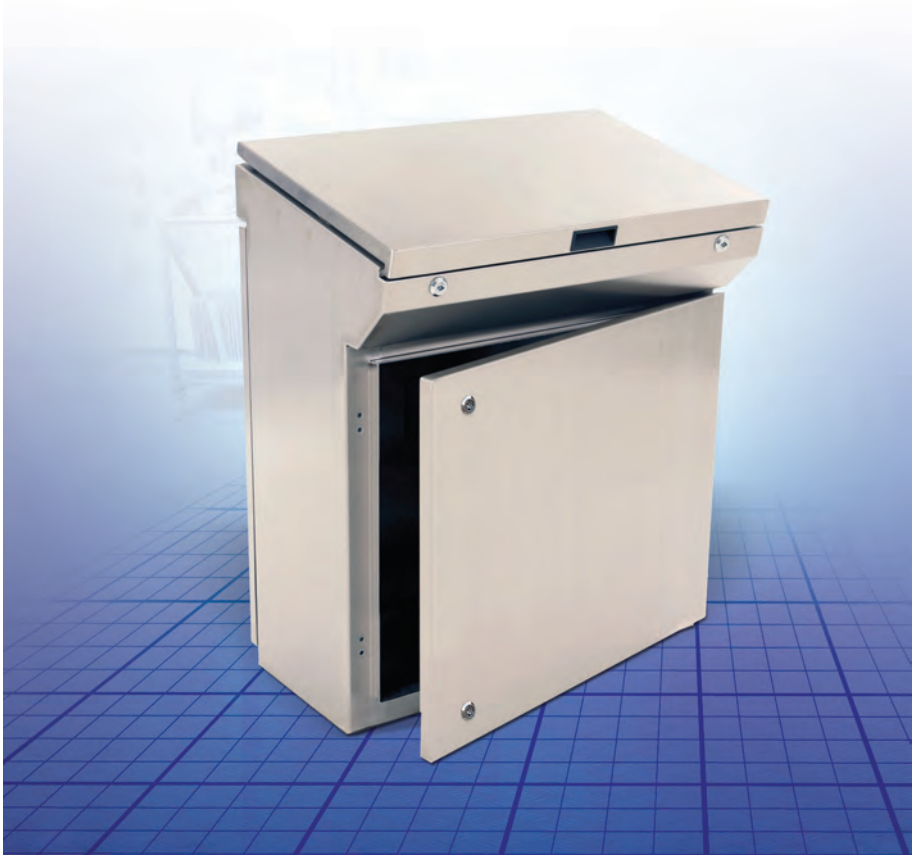

IP 66/ NEMA4x, 12 ,13;
IP 55/ NEMA 12,13

Technical data

Material: AISI 304 pre-grained stainless steel / AISI 316L (on request).
Body and door: 2mm. Rear panel 1.5mm . Bottom plates 1.5mm . Mounting plate: 2.5mm galvanized steel.
Body: Folded and seam welded. Integrated plinth.
Doors and panels: Single folded surface mounted with hinges allowing left and right-hand opening to base door. Angle 12° from horizontal. Concealed hinges on top edge allow 80° opening. Panel held open by self engage/self release mechanical panel stay. Double doors on 1200 wide base units.
Mounting plate: Standard mounting plate in base unit.
Cable inlet: Bottom opening for cable access. Bottom plate for cable glanding supplied as standard.
Lock: Double-bit 3mm locks for top panel. For base, two double-bit 3mm locks. Other options available. See wall mounting section.
Earthing: M8 threaded studs on body, door, top panel and rear panel.
Finish: 240s pre grained (average 0.5 micron), (other grades available upon request).
Protection: Single doors: IP 66/NEMA , 4X, 12 13 Double doors: IP 55/NEMA 12and 13.
Delivery: Mounting plate and suitable nuts and washers for earthing. The console is delivered on a wooden pallet.

MPGS, IP 66/ NEMA4x, 12 ,13; IP 55/ NEMA 12,13

Stainless steel

H	W	D	h	w	Usable depth	Part No. AISI 304	Part No. AISI 316L
985	600	400	790	499	357,5	MPGS06	MPGS06-316 *
	800	400	790	699	357,5	MPGS08	MPGS08-316 *
	1000	400	790	899	357,5	MPGS10	MPGS10-316 *
	1200	400	790	1099	357,5	MPGS12	MPGS12-316 *

Note: Only 1200 wide consoles have double doors.
•Delivery times upon request

Dimensions

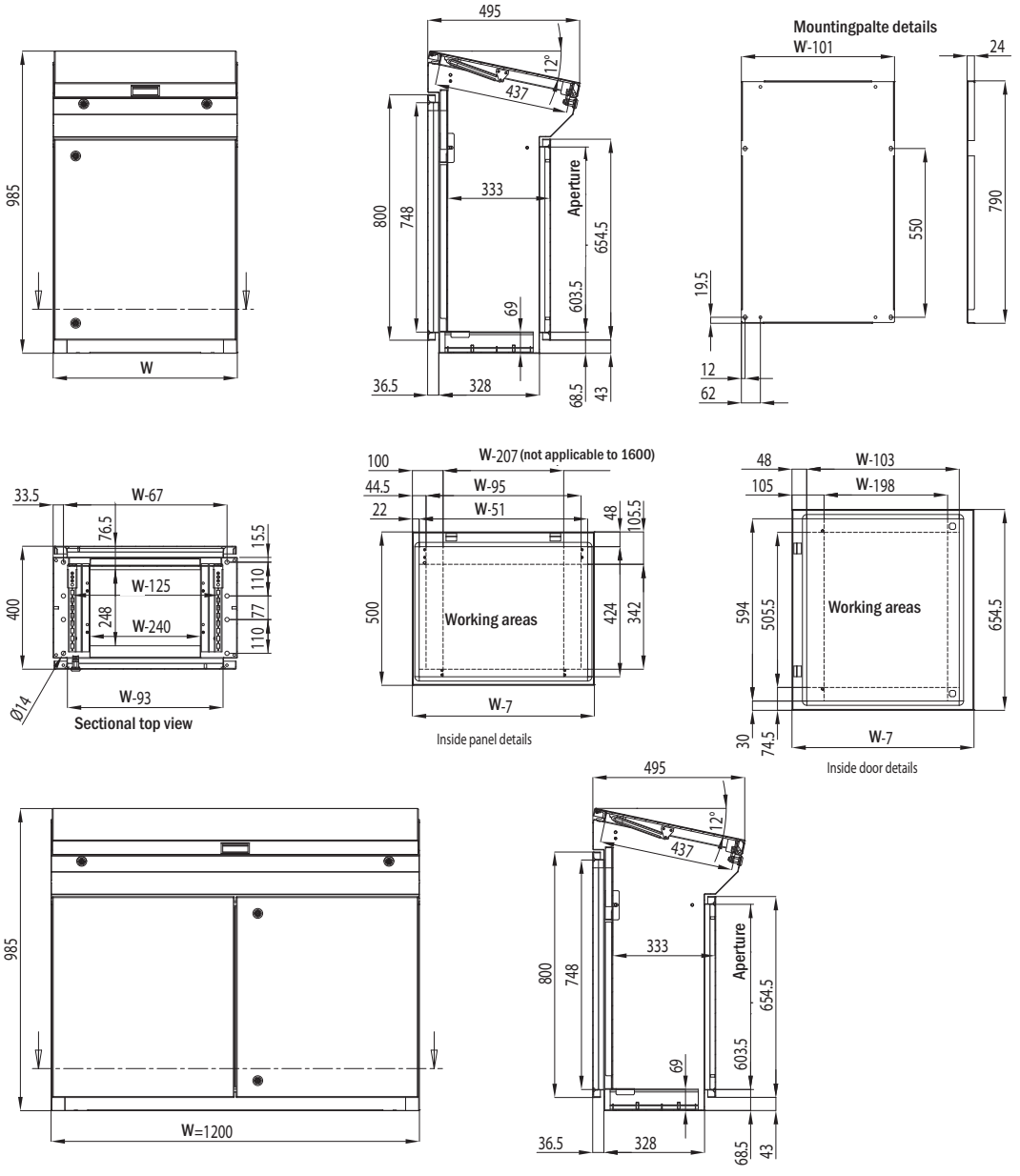

MPCS

Console system, stainless steel

Flexible console system, allows a versatile number of combinations to configure the system to your design. The top section and desk panels are held open by a self-engage/self-release mechanical panel stay and combines with the top removable rear panel and front door, to ensure convenient access. The MPCS range provides high corrosion resistance and is the ideal solution for harsh environments.

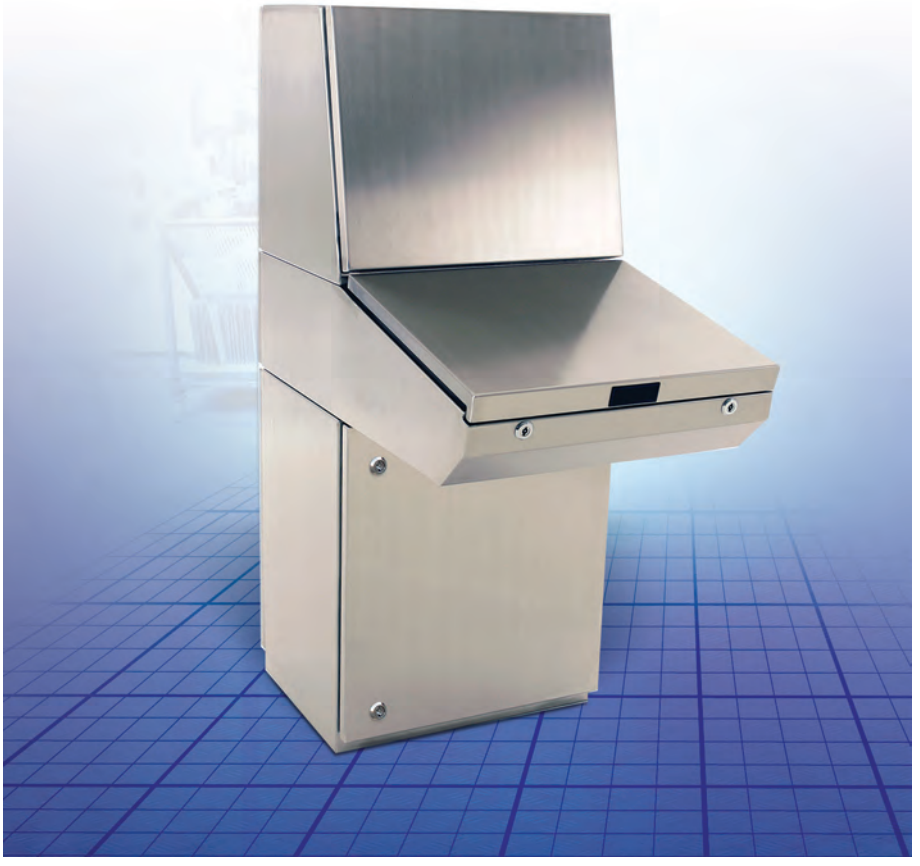

IP 66 / NEMA 4x ,12,13;
IP 55 / NEMA 12,13

Technical data

Material: MPCS: AISI 304 pre-grained stainless steel/ AISI 316L (on request).
Body and door: 2mm. Rear panel 1.5mm. Bottom plates 1.5mm. Mounting plate: 2.5mm galvanized steel.
Body: Folded and seam welded. Integrated plinth.
Doors and panels: Single folded surface mounted with hinges allowing left and right-hand opening to base door. Top section and desk panels held open by self engage/self release mechanical panel stays. Concealed hinges allowing 90° opening on the desk. Double doors on 1200mm and 1600mm wide base units.
Mounting plate: Standard in base unit. Fixed by fixing brackets on C rail, top and bottom for depth adjustment. Optional in desk and top section units.
Lock: Double-bit 3mm locks for top section and desk unit. For base, two double-bit 3mm locks. Other options available, see wall mounting section.
Cable access: Bottom open in base unit for cable access. Bottom plates for cable glanding supplied as standard.
Earthing: M8 threaded studs on bodies, doors and rear panels.
Finish: 240s pre grained (average 0.5 micron).
Protection: MPCS single door: Corresponds with IP 66 and NEMA 4X, 12 and 13.
MPCS double door: Corresponds with IP 55 and NEMA 12 and 13.
Delivery: The base unit is provided with a mounting plate as standard. Desk and top section units have mounting plates provided as accessories. All top and base apertures can be closed by choosing the appropriate accessory plate. Suitable nuts and washers for the various earthing studs are provided.

MPCS, IP 66 / NEMA 4x ,12,13; IP 55 / NEMA 12,13

Top section units
Stainless steel

H	W	D	Part No. AISI 304	Part No. AISI 316L
500	600	494	MPCS061	MPCS061-316 *
	800	494	MPCS081	MPCS081-316 *
	1000	494	MPCS101	MPCS101-316 *
	1200	494	MPCS121	MPCS121-316 *
	1600	494	MPCS161	MPCS161-316 *

Desk units
Stainless steel

H	W	D	Part No. AISI 304	Part No. AISI 316L
250	600	985	MPCS062	MPCS062-316 *
	800	985	MPCS082	MPCS082-316 *
	1000	985	MPCS102	MPCS102-316 *
	1200	985	MPCS122	MPCS122-316 *
	1600	985	MPCS162	MPCS162-316 *

Base units with mounting plate
Stainless steel

H	W	D	h	w	Usable depth	Part No. AISI 304	Part No. AISI 316L
700	600	500	590	499	470,5	MPCS063	MPCS063-316 *
	800	500	590	699	470,5	MPCS083	MPCS083-316 *
	1000	500	590	899	470,5	MPCS103	MPCS103-316 *
	1200	500	590	1099	470,5	MPCS123	MPCS123-316 *
	1600	500	590	1499	470,5	MPCS163	MPCS163-316 *

Note: Only 1200 and 1600 wide consoles have double doors.
•Delivery times upon request

Dimensions

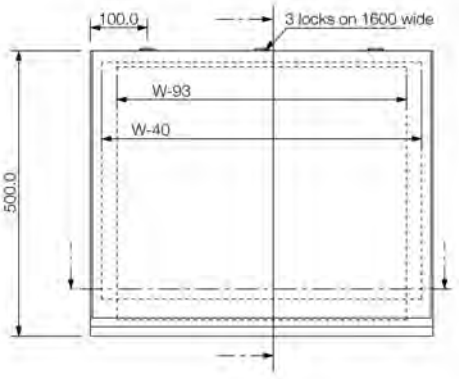
100.0
3 locks on 1600 wide
W-93
W-40
500.0

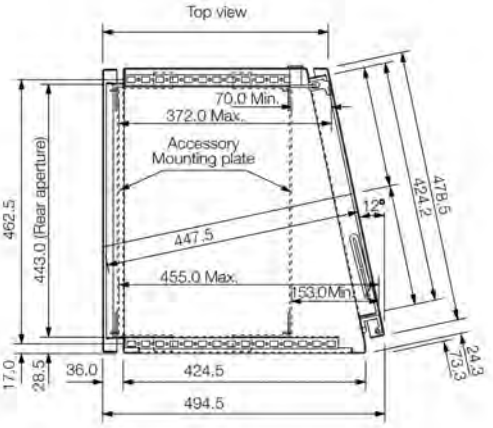
Top view
70.0 Min.
372.0 Max.
Accessory Mounting plate
462.5
443.0 (Rear aperture)
447.5
455.0 Max.
153.0 Min.
12°
424.2
478.5
24.3
13.3
17.0
28.5
36.0
424.5
494.5

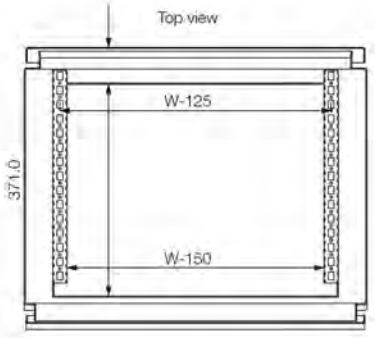
Top view
W-125
371.0
W-150

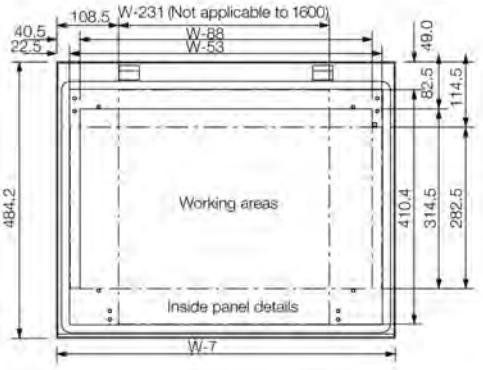
108.5
W-231 (Not applicable to 1600)
40.5
22.5
W-88
W-53
49.0
82.5
114.5
484.2
Working areas
410.4
314.5
282.5
Inside panel details
W-7

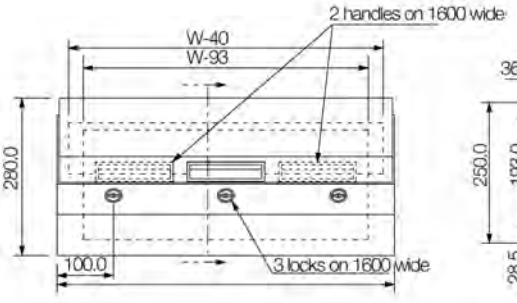
2 handles on 1600 wide
W-40
W-93
290.0
100.0
3 locks on 1600 wide

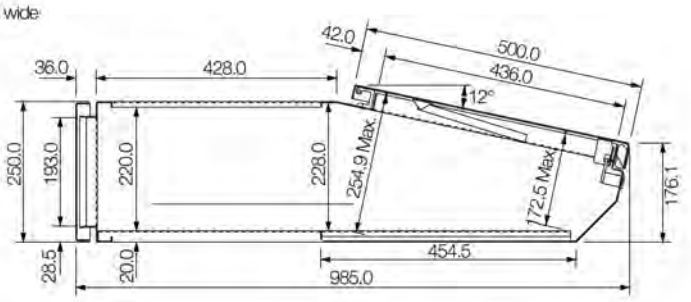
42.0
500.0
436.0
36.0
428.0
12°
250.0
193.0
220.0
228.0
254.9 Max.
172.5 Max.
176.1
28.5
20.0
454.5
985.0

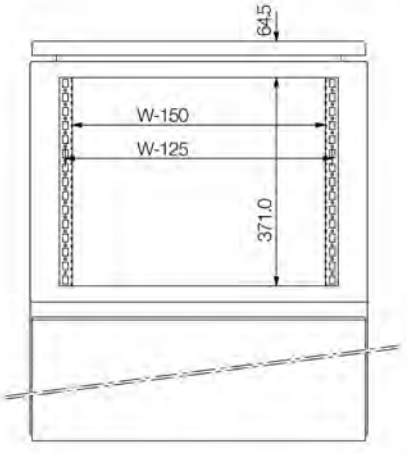
64.5
W-150
W-125
371.0

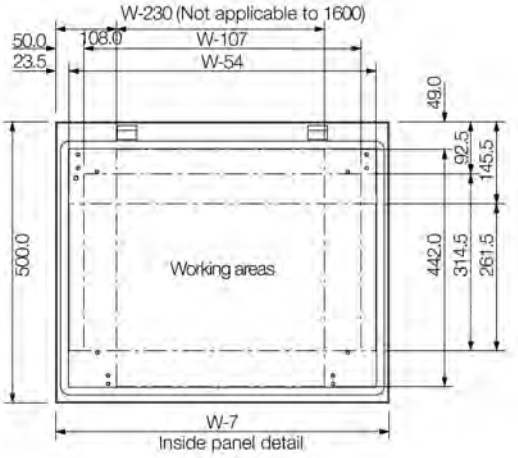
W-230 (Not applicable to 1600)
50.0
23.5
108.0
W-107
W-54
49.0
92.5
145.5
500.0
Working areas
442.0
314.5
261.5
W-7
Inside panel detail

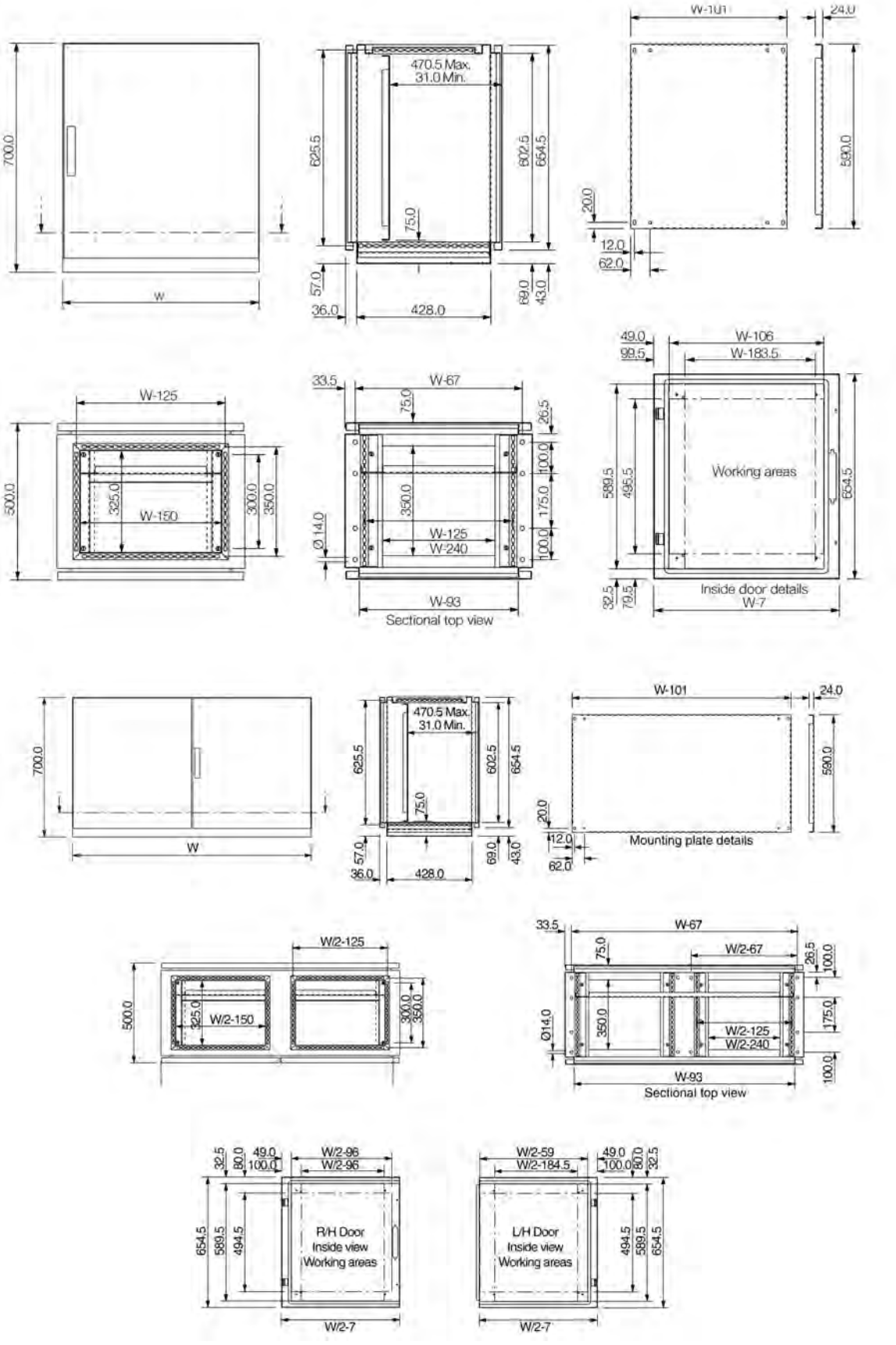
700.0
W
470.5 Max.
31.0 Min.
625.5
602.5
654.5
75.0
57.0
36.0
428.0
69.0
43.0
W-101
24.0
590.0
20.0
12.0
62.0
W-125
500.0
325.0
W-150
300.0
350.0
33.5
W-67
75.0
26.5
100.0
175.0
100.0
350.0
Ø14.0
W-125
W-240
W-93
Sectional top view
49.0
99.5
W-106
W-183.5
589.5
495.5
Working areas
654.5
32.5
79.5
Inside door details
W-7
700.0
W
470.5 Max.
31.0 Min.
625.5
602.5
654.5
75.0
57.0
36.0
428.0
69.0
43.0
W-101
24.0
590.0
20.0
12.0
62.0
Mounting plate details
W/2-125
500.0
325.0
W/2-150
300.0
350.0
33.5
W-67
75.0
W/2-67
26.5
100.0
Ø14.0
350.0
175.0
W/2-125
W/2-240
100.0
W-93
Sectional top view
32.5
80.0
49.0
100.0
W/2-96
W/2-96
654.5
589.5
494.5
R/H Door
Inside view
Working areas
W/2-7
W/2-59
W/2-184.5
49.0
100.0
80.0
32.5
494.5
589.5
654.5
L/H Door
Inside view
Working areas
W/2-7

MPG, MPC, MPGS, MPCS accessories

PF, Front/rear Plinths

Description: Front and rear plinth sections. For cabling without any restrictions and in accordance with the VDE 0113 standard. The plinth consists of four corner pieces with removable front covers. The side panels PST are to be ordered separately. Produced in 100mm and 200mm heights. 200mm high plinths are delivered with a rear cover for cabling that consists of two removable panels 100mm high. The front cover is a one piece panel of 200mm high. All panels have double returns on each panel for added strength.
Material: Corner pieces in 2mm and panels in 1.5mm mild steel.
Finish: RAL 7022 structured powder coating.
Pack quantity: 1 set of 4 corner pieces including covers. Front and rear panel (2 rear panels for 200mm, high plinths) with mounting accessories. Mounting accessories for side panels PST.
Mounting requirement: When adding enclosures, it is recommended to add the side panels PST for a complete plinth.

H	W	Part No.
100	400	PF1040
	600	PF1060
	700	PF1070
	800	PF1080
	1000	PF1100
	1200	PF1120
	1400	PF1140
200	400	PF2040
	600	PF2060
	700	PF2070
	800	PF2080
	1000	PF2100
	1200	PF2120
	1400	PF2140

** For enclosures 1600mm wide use 2 x 800mm wide plinth*

PST, Plinth Side panels

Description: Mounted directly to the corner pieces.
Material: 1.5mm mild steel.
Finish: Structure powder paint, RAL 7022.
Pack quantity: 2 side panels, mounting accessories included in PF package.

H	D	Part No.
100	400	PST1040
	500	PST1050
	600	PST1060
	800	PST1080
200	400	PST2040
	500	PST2050
	600	PST2060
	800	PST2080

MSNS, Plinths

Description: Allowing cabling without any restrictions and in accordance with the VDE 0113 standard. The plinth consists of four corner pieces with removable plates. Available 100mm and 200mm high with removable side plates.
Material: Corners 3mm, and panels 1.5mm AISI 304 pre-grained stainless steel.
Finish: 240s pre-grained stainless steel (average 0.5 micron)
Pack quantity: 1 plinth with mounting material.

H	W	D	Part No.
100	600	400	MSNS1064
		500	MSNS1065
	800	400	MSNS1084
		500	MSNS1085
	1000	400	MSNS1104
		500	MSNS1105
	1200	400	MSNS1124
		500	MSNS1125
200	600	400	MSNS2064
		500	MSNS2065
	800	400	MSNS2084
		500	MSNS2085
	1000	400	MSNS2104
		500	MSNS2105
	1200	400	MSNS2124
		500	MSNS2125

** For enclosures 1600mm wide use 2 x 800mm wide plinth*

CBPZ, Mounting plate

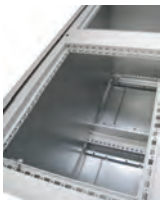

Description: Standard Mounting Plate for MPC(S) base section.
Material: 2.5mm galvanized steel.
Pack quantity: 1 plate with mounting accessories.

Enclosure dimension	Mounting plate dimension		
W	h	w	Part No.
600	590	499	CBPZ06
800	590	699	CBPZ08
1000	590	899	CBPZ10
1200	590	1099	CBPZ12
1600	590	1499	CBPZ16

CDPZ, Mounting plates

Description: Can be used in top section and desk unit, also as a separation plate between desk and base.
Material: 3mm galvanized steel.
Pack quantity: 1 plate with mounting accessories.

Enclosure dimension	Mounting plate dimension		
W	h	w	Part No.
600	427,5	530	CDPZ06
800	427,5	730	CDPZ08
1000	427,5	930	CDPZ10
1200	427,5	1130	CDPZ12
1600	427,5	1530	CDPZ16

SGPZ, Segregation plates

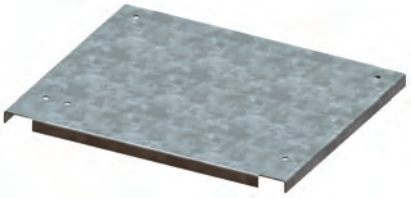

Description: Used to separate top section and desk unit. Can also be used as a mounting plate in desk.
Material: 3mm zinc plated steel.
Pack quantity: 1 plate with mounting accessories.

W	Part No.
600	SGPZ06
800	SGPZ08
1000	SGPZ10
1200	SGPZ12
1600	SGPZ16

GCPZ, Mounting plate

.

Description: Standard Mounting Plate for MPG(S) console. Adjustable in depth using MPGDA accessory.
Material: 2.5mm galvanized steel.
Pack quantity: 1 plate with mounting accessories.

Enclosure dimension	Mounting plate dimension		
W	h	w	Part No.
600	790	499	GCPZ06
800	790	699	GCPZ08
1000	790	899	GCPZ10
1200	790	1099	GCPZ12
1600	790	1499	GCPZ16

MPGDA, Depth adjust kit

Description: To provide depth adjustment for mounting plate.
Material: 2mm galvanized steel.
Pack quantity: 1 set with mounting accessories.

Part No.
MPGDA01

MPG, MPC, MPGS, MPCS accessories

BDP, Cover plates

Description: Used to cover top opening of base or desk unit.
Material: 2mm mild steel.
Finish: Structure powder paint, RAL 7035.
Pack quantity: 1 piece with mounting accessories.

W	Part No.
600	BDP06R5
800	BDP08R5
1000	BDP10R5
1200	BDP12R5
1600	BDP16R5

MPPS, Stainless panel

Description: For replacing standard panel on MPC(S) top section unit where hard wearing or corrosion resistance is required.
Material: 2mm AISI 304 pre-grained stainless steel.
Finish: 240s pre-grained stainless steel (average 0.5 micron)

H	W	Part No.
500	600	MPPS061
	800	MPPS081
	1000	MPPS101
	1200	MPPS121
	1600	MPPS161

BDPS, Cover plates

Description: Used to cover top openings of base, or desk units where hard wearing or corrosion resistance is required.
Material: 2mm AISI 304 pre-grained stainless steel.
Finish: 240s pre-grained stainless steel (average 0.5 micron)
Pack quantity: 1 piece with mounting accessories.

W	Part No.
600	BDPS06
800	BDPS08
1000	BDPS10
1200	BDPS12
1600	BDPS16

MPLS, Stainless lid

Description: For replacing standard lid on MPC(S) desk unit or MPG(S) where hard wearing or corrosion resistance is required.
Material: 2mm AISI 304 pre-grained stainless steel.
Finish: 240s pre-grained stainless steel (average 0.5 micron)

W	P	Part No.
600	500	MPLS062
800	500	MPLS082
1000	500	MPLS102
1200	500	MPLS122
1600	500	MPLS162

DNN, Mounting angles (19")

Description: To achieve 19", or partial 19" in 800 mm, wide enclosures, these profiles can be mounted with the mounting brackets DNB or DNC. To achieve 19" in 600 mm, wide enclosures, use the brackets DND.
Material: 2 mm zinc plated steel.
Pack quantity: 2 pieces

N° of units	Part No.
6	DNN06
9	DNN09
10	DNN10
11	DNN11
13	DNN13
15	DNN15

DND, Mounting angles (19") fixing brackets

Description: For fixing 482.6 mm, mounting brackets (19") in 600 mm, wide enclosures. Adjustable in depth in 12.5 mm, steps.
Material: 3mm zinc plated mild steel.
Pack quantity: 4 brackets with mounting accessories.

Part No.
DND01

DNB, Mounting angles (19") brackets

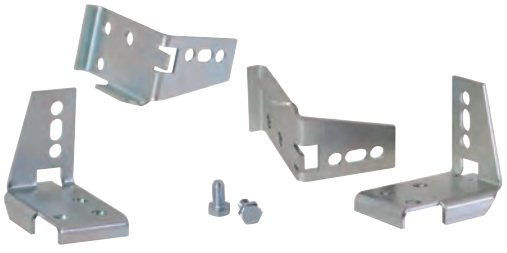

Description: For mounting 19" profiles in 800mm wide enclosures
Material: 3mm zinc plated steel.
Pack quantity: 4 brackets with mounting accessories.

Part No.
DNB01

MTD, Vertical dividing bar

Description: Profile with hole pattern to create a division in double door consoles for mounting equipment in half the width.
Material: 2mm zinc plated steel.
Pack quantity: 1 pair

Part No.
MTD700

KMB/MPC, Vertical mounting profiles

Description: For console system and consoles. Vertical mounting profiles with 25mm, hole pattern. When fitted into the frame all the relevant accessories can be used
Material: 2mm zinc plated steel.
Pack quantity: 2 profiles including fixing material.

H	Part No.
700	KMB700