Helvar

Electronic Ballasts • LED Control Gear • Magnetic Ballasts • Ignitors

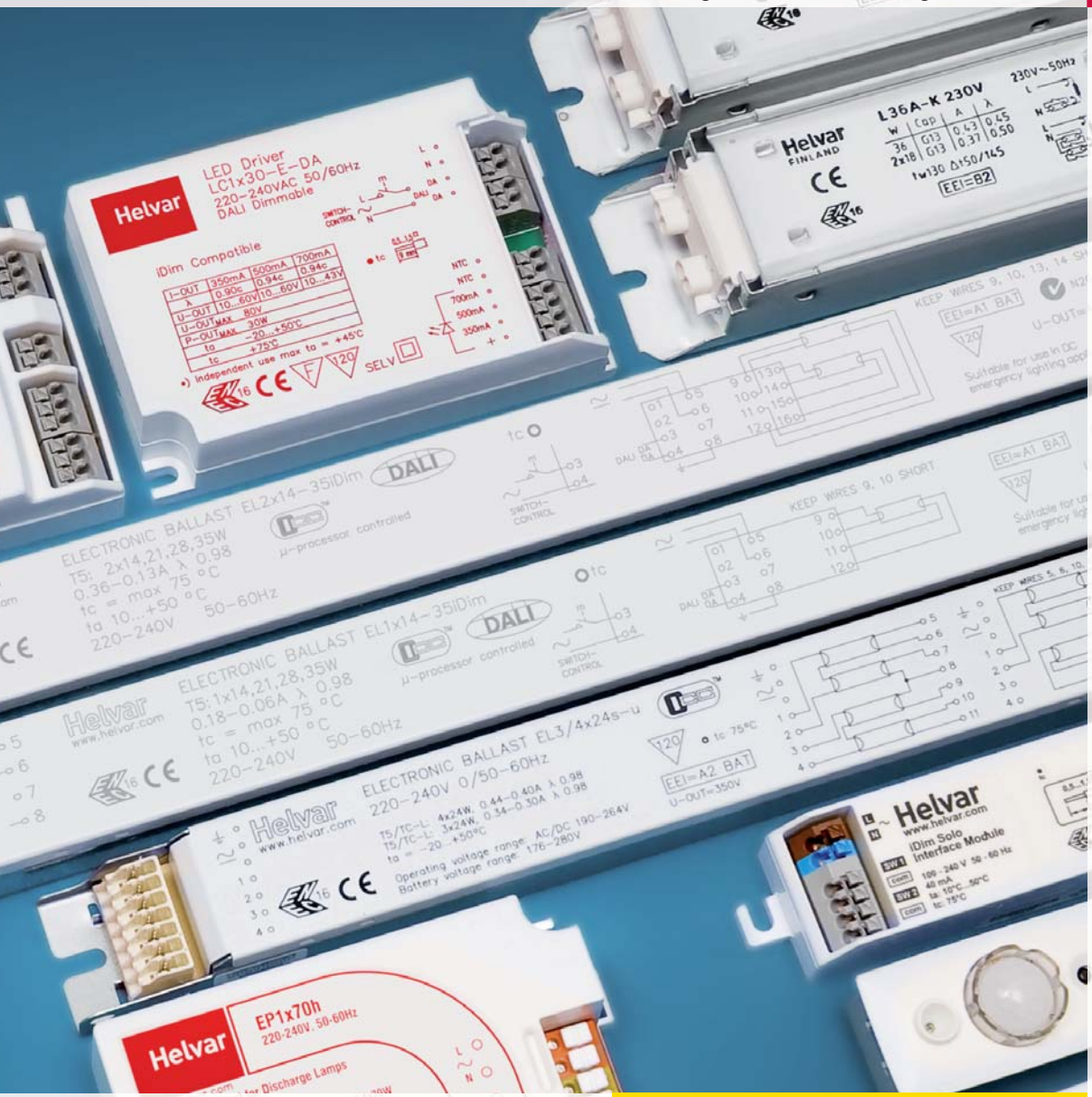

Component catalogue 2012

People | Innovations | Solutions

Head Office

Helvar Oy Ab
Yrittäjäntie 23
FI - 03600 Karkkila
Finland

Tel: +358 9 5654 1
Fax: +358 9 5654 9600

United Kingdom

Helvar Ltd
Hawley Mill
Hawley Road
Dartford
Kent, DA2 7SY
United Kingdom

Tel: +44 (0)1322 222211
Fax: +44 (0)1322 282216

Finland

Helvar Oy Ab
Vetotie 3
FI-01610 Vantaa

Tel: +358 9 5654 1
Fax: +358 9 5654 9625

Germany

Helvar GmbH
Philipp-Reis-Straße 4-8
DE-63150 Heusenstamm
Germany

Tel: +49 (0) 6104 / 78075 - 0
Fax: +49 (0) 6104 / 78075 - 23

Italy

Helvar S.r.l.
Via W-Tobagi 26/1
IT - 20068 Peschiera Borromeo (MI)
Italy

Tel: +39 02 55 30 10 33
Fax: +39 02 55 30 10 32

Sweden

Helvar AB
Åsögatan 155
SE-11632 Stockholm
Sweden

Tel: +46 (0) 8 545 239 70
Fax: +46 (0) 8 22 31 81

Hungary

Helvar Kft.
Lomb u. 31/b.
HU-1139 Budapest
Hungary

Tel: +36 1 2393 136
Fax: +36 1 2393 145

Russia

Representative Office of Helvar Oy Ab
Sadovnicheskaya naberezhnaya 79
115035 Moscow
Russia

Tel: + 7 (495) 728 82 91

France

Helvar Bureau France
12 Allée Joséphine de Beauharnais
FR-95320 Saint-Leu-la-Forêt
France

Tel: +33 1 3418 1281
Fax: +33 1 3418 0880

China

Helvar Lighting (Suzhou) Co., Ltd.
15F International Building,
2 Suhua Road, SIP,
Suzhou, 215021

Tel: + 86 512 6763 3078
Fax: + 86 512 6763 3079

For detailed list of Helvar distributors and representatives please visit: www.helvar.com

Table of contents

Electronic ballasts for fluorescent lamps 3 — 1

Standard electronic ballasts 4

EL-s, EL-su	for T5-fluorescent lamps	6
EL-s, EL-su EL-ngn	for T8-fluorescent lamps	10
EL-s, EL-TCs	for Compact fluorescent lamps	12
	Wiring diagrams & technical characteristics	18

Analogue (1-10 V) controllable electronic ballasts 21 — 2

EL-sc	for T5-fluorescent lamps	22
EL-sc	for T8-fluorescent lamps	24
EL-sc	for Compact fluorescent lamps	25
	Wiring diagrams & technical characteristics	26
	Switch-Control information	28

Digital DALI controllable electronic ballasts 29 — 3

EL-iDim	for T5-fluorescent lamps	30
EL-iDim	for T8-fluorescent lamps	32
EL-iDim, EL-iDim-c	for Compact fluorescent lamps	34
	Wiring diagrams & technical characteristics	35
	Switch-Control information	37

Magnetic ballasts for fluorescent lamps 38 — 4

Ballasts for fluorescent T8 Lamps

230 V 50 Hz	40
240 V 50 Hz	42
220 V 50 Hz	43
Wiring diagrams, dimensions and delivery information	44

Ballasts for compact fluorescent lamps

230 V 50 Hz	45
240 V 50 Hz	48
Wiring diagrams, dimensions and delivery information	49

Electronic ballasts for HID-lamps 50 — 5

EP-h, OPTIpower	Electronic ballasts for HID-lamps	51

Ballasts & ignitors for HID-lamps 54 — 6

Ballasts for high pressure mercury lamps	56
Ballasts for high pressure sodium lamps	58
Power reduction ballasts for high pressure sodium	60
Ballasts for metal halide lamps	61
Ballasts for HID-lamps (220 V)	63
Wiring diagrams, dimensions and delivery information	64
Electronic superimposed pulse ignitors	66

LED Control Gear 69 — 7

LL-U-CC	Constant current drivers	70
LC1x30-E-CC / -DA / -AN	Constant current and dimmable drivers	72
OL-E-CC	60 and 100 W constant current drivers	75
LC50-U-DX3	DMX LED driver	78

General information instructions for use — 8

Electronic ballasts	80
Magnetic ballasts	82
Quantity of ballasts for MCB's	84
Wire release instructions	88
EL-s wiring options	89
Lamp markings	90

Sensors 91 — 9

iDim Sense	iDim Concept	92
Minisensor3	Minisensor	96
MIMO2, MIMO3	MIMO2 Constant light sensor, MIMO3 sensor	97
SL-PIR-SW, SL-PIR-AN	µDim PIR sensors	99
SL-MW-SW, SL-MW-AN, SL-MW-DA	µDim Microwave sensors	101
140xxx	TK4 1-10 V Ballast controller	105

Lamp ballast compatibility & approvals — A

Lamp ballast compatibility & approvals	106

Product overview - electronic Ballasts

One of the first companies to develop and manufacture electronic ballasts, Helvar's history in these products extends back to the early 1980s. Since that time, Helvar has remained at the forefront, offering a comprehensive range of innovative electronic ballasts covering all relevant applications with T5, T8 and compact fluorescent lamps. The tables below show lamp categories where ballast combinations are found.

Standard electronic Ballasts

	For T5 lamps	For T8 lamps	For compact lamps
EL-s	●	●	●
EL-su	●	●	●
EL-ngn	-	●	●
EL-TCs	●	●	●

Analogue controllable electronic ballasts

	For T5 lamps	For T8 lamps	For compact lamps
EL-sc	●	●	●
EL-CHFC3	-	-	●

Digital DALI electronic ballasts

	For T5 lamps	For T8 lamps	For compact lamps
EL-iDim	●	●	●
EL-iDim-c	-	-	●

EL-ngn, EL-s & EL-TCs

Standard electronic ballasts – highest energy savings and reliability

Continuous research and development in new technologies has led to the introduction of a host of innovative products over the years. Among the latest of these are the EL-TCs and the EL-ngn standard ballasts. These ballasts are characterized by excellent thermal design, resulting in the highest energy savings and highest reliability, and embodying Helvar's 'green values' that help to guarantee minimum environmental impact!

Helvar uses only the highest-quality components and materials in the manufacture of its ballasts, and combines this with quality design and extensive testing under the harshest conditions. It's hardly surprising then that failure rates are among the lowest in the market, exceeding industrial expectations 10-fold!

Helvar's manufacturing processes are also certified to ISO 9001 and ISO14001.

EL-s – many imitators, few equals

EL-s is a high-performance ballast meeting the toughest market requirements. It was also the first slim-line ballast in the market, with a height of only 21 mm. This offers a huge advantage to luminaire designers having to squeeze ballasts into T5 luminaires. The feature was so much appreciated by the OEMs that it's been copied by all Helvar's competitors and has become an industry standard.

With its advance thermal design and the use of OCC technology, the EL-s also has one of the lowest power losses in the market. The superior safety and EMC performance make them suitable for use in protection class II fittings. Moreover, its multi-lamp operation feature enables one ballast to drive all HE-T5 lamps in an installation. It is also possible to drive a combination of T8/TC-L and T5/TC-L lamps with one ballast. This offers major advantages in reduced logistics and transportation costs, as well as contributing to reduced CO_2 emissions.

EL-TCs – the cool runner

EL-TCs range is capable of driving as many as 50 lamps in various TC-DE, TC-TE, TC-SE, TC-DD, T5c, TC-L, TC-F, PL-R, T8 and T5 lamp combinations! The beauty of the ballasts is their 'dual-technology' that cost-effectively combines both single- and twin- lamp versions into one ballast.

What's more, the EL-TCs is surprisingly small, yet it is still capable of running cool even under full thermal stress, thanks to its OCC technology and the clever thermal design of its PCB. This feature has been praised by many OEMs and it is widely acknowledged to be the most reliable CFL ballast in the market.

EL-ngn – the Next GeNeration

The EL-ngn is the latest innovation for high-volume markets from Helvar, developed to meet the needs of luminaire designers looking to replace magnetic ballasts with an electronic version combining the benefits of both! Its no-compromise design offers the highest specifications, and its green credentials are confirmed by the fact that it has the highest Energy Efficiency Index (EEI) of A2. It is also considered to be one of the most user-friendly ballasts, and its proven reliability means that it is widely accepted by even the most demanding and quality-conscious OEMs.

The EL-ngn is available for T8 lamps in 1-, 2- and 4-lamp configurations.

OCC™ - Optimum Cathode Control

The proven OCC™ - Optimum Cathode Control technology used in Helvar EL-s, EL-sc, EL-iDim and EL-TCs electronic ballast ranges.

OCC™ ensures that the electrical parameters supplied to the lamp are always optimum, minimising system losses and maximising lamp lifetime. The achieved energy saving is considerable compared to existing ballasts on the market.

Electronic ballasts for T5 fluorescent lamps

1

14-80 W 220-240 V, 50-60 Hz

- Only 21 mm high
- Optimal lamp operation
- Wide operational ambient temperature range
- Standard & sidemount possibilities
- Low power losses
- Silent operation
- Stabilised flickerfree light
- High power factor

A2

Lamp type	Wattage	No. of lamps	Ballast	EEI	Dimensions	Connection (p.18)	Weight (g)	Circuit power (W)	Mains current (A)	Lamp power (W)
	14	1	EL1x14-35s	A2	1	1	175	15.5	0.08-0.07	13.7
	14	2	EL2x14-35s	A2	2	3	250	31	0.15-0.13	13.7
	14	3	EL3/4x14s	A2	2	5	250	46	0.22-0.19	13.7
	14	4	EL3/4x14s	A2	2	6	250	62	0.29-0.26	13.7
	21	1	EL1x14-35s	A2	1	1	175	23	0.12-0.10	20.7
	21	2	EL2x14-35s	A2	2	3	250	45	0.22-0.19	20.7
	24	1	EL1x24s	A2	1	1	190	25	0.12-0.11	22,5
	24	2	EL2x24s	A2	2	2	230	49	0.24-0.21	22.5
	28	1	EL1x14-35s	A2	1	1	175	30	0.15-0.12	27.8
	28	2	EL2x14-35s	A2	2	3	250	60	0.29-0.25	27.8
	35	1	EL1x14-35s	A2	1	1	175	38	0.18-0.16	34.7
	35	2	EL2x14-35s	A2	2	3	250	75	0.35-0.31	34.7
	39	1	EL1x39/36s	A2	1	1	190	42	0.19-0.18	38
	39	2	EL2x39/36s	A2	2	2	245	81	0.36-0.32	38
	49	1	EL1x49s	A2	1	1	190	52.5	0.25-0.23	49.3
	49	2	EL2x49s	A2	2	3	260	104	0.50-0.45	49.3
	54	1	EL1x54s	A2	1	1	200	58	0.26-0.24	53.8
	54	2	EL2x54s	A2	2	2	260	114.5	0.53-0.48	53.8
	80	1	EL1x80s	A2	1	1	200	85	0.40-0.36	80

Note: *See pages 18-19 for connection diagrams and additional characteristics.*

Dimensions	1	2
Length 'a' (mm)	280	360
Width 'b' (mm)	30	30
Height 'c' (mm)	21	21
'd' (mm)	270	350

a

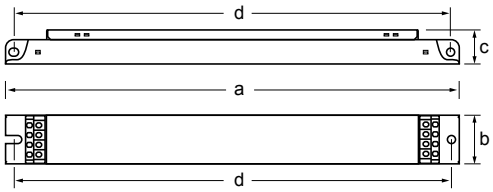

Delivery information

Ballast	Unit package		Transportation package		
	Minimum delivery amount	Plastic binding strip	One-way pallet 1200 x 820 (pcs.)	Pallet weight (kg)	Pallet height (cm)
EL1 x s	10	●	2000	350 - 420	57
EL2 x s	10	●	1500	395	57
EL3/4 x s	10	●	1500	390	57

Electronic ballasts for T5-eco fluorescent lamps

14-80 W 220-240 V, 50-60 Hz

- Only 21 mm high
- Optimal lamp operation
- Wide operational ambient temperature range
- Standard & sidemount possibilities
- Low power losses
- Silent operation
- Stabilised flickerfree light
- High power factor

A2

Lamp type	Wattage	No. of lamps	Ballast	EEI	Dimensions	Connection (p.18)	Weight (g)	Circuit power [1] (W)	Mains current [1] (A)	Lamp power [1] (W)
	14	1	EL1x14-35s	A2	1	1	175	13-15	0.08-0.06	11.3-13.4
	14	2	EL2x14-35s	A2	2	3	250	29.2-30.3	0.13-0.12	11.3-13.4
	14	3	EL3/4x14s	A2	2	5	250	38.8-43	0.19-0.17	12.1-13.7
	14	4	EL3/4x14s	A2	2	6	250	52.3-57.4	0.25-0.23	12.1-13.7
	21	1	EL1x14-35s	A2	1	1	175	19.5	0.09	17.7
	21	2	EL2x14-35s	A2	2	3	250	39.5	0.17	17.7
	24	1	EL1x24s	A2	1	1	190	21.6	0.10	19.3
	24	2	EL2x24s	A2	2	2	230	43.6	0.19	19.3
	28	1	EL1x14-35s	A2	1	1	175	28.6	0.12	25.8
	28	2	EL2x14-35s	A2	2	3	250	57.4	0.25	26.2
	35	1	EL1x14-35s	A2	1	1	175	35.3-37.4	0.16-0.15	32.5-34.3
	35	2	EL2x14-35s	A2	2	3	250	70.8-72.7	0.31-0.30	32.5-34.3
	49	1	EL1x49s	A2	1	1	190	46.8-48	0.21-0.20	43.4-47.4
	49	2	EL2x49s	A2	2	3	260	94-100.3	0.43-0.40	43.4-47.4
	54	1	EL1x54s	A2	1	1	200	52.2-54	0.24-0.22	48.3-52
	54	2	EL2x54s	A2	2	2	260	105.4-108.5	0.46-0.45	48.3-52
	80	1	EL1x80s	A2	1	1	200	74.8-80	0.34-0.32	70.5-75.6

1) Depending on difference in lamps from various manufacturers

Note: *See pages 18-19 for connection diagrams and additional characteristics.*

Dimensions	1	2
Length 'a' (mm)	280	360
Width 'b' (mm)	30	30
Height 'c' (mm)	21	21
'd' (mm)	270	350

a

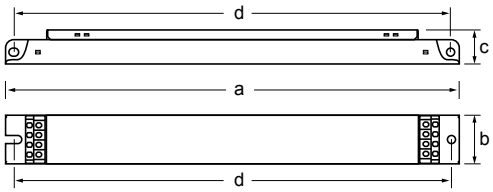

Delivery information

Ballast	Unit package		Transportation package		
	Minimum delivery amount	Plastic binding strip	One-way pallet 1200 x 820 (pcs.)	Pallet weight (kg)	Pallet height (cm)
EL1 x s	10	●	2000	350 - 420	57
EL2 x s	10	●	1500	395	57
EL3/4 x s	10	●	1500	390	57

Electronic ballasts for T5 fluorescent lamps

1

14-80 W 220-240 V, 50-60 Hz

- Only 21 mm high
- Optimal lamp operation
- Wide operational ambient temperature range
- Standard & sidemount possibilities
- With terminals for both manual and automatic wiring (IDC & push-in)
- Low power losses
- Silent operation
- Stabilized flickerfree light
- High power factor

A2

Lamp type	Wattage	No. of lamps	Ballast	EEI	Dimensions	Connection (p.18)	Weight (g)	Circuit power (W)	Mains current (A)	Lamp power (W)
	14	1	EL1x14-35s-u	A2	1	1	175	15.5	0.08-0.07	13.7
	14	2	EL2x14-35s-u	A2	2	4	250	31	0.15-0.13	13.7
	14	3	EL3/4x14s-u	A2	1	7	210	46	0.22-0.19	13.7
	14	4	EL3/4x14s-u	A2	1	8	210	62	0.29-0.26	13.7
	21	1	EL1x14-35s-u	A2	1	1	175	23	0.12-0.10	20.7
	21	2	EL2x14-35s-u	A2	2	4	250	45	0.22-0.19	20.7
	24	3	EL3/4x24s-u	A2 BAT	1	7	215	73	0.34-0.30	22.5
	24	4	EL3/4x24s-u	A2 BAT	1	8	215	97	0.44-0.40	22.5
	28	1	EL1x14-35s-u	A2	1	1	175	30	0.15-0.12	27.8
	28	2	EL2x14-35s-u	A2	2	4	250	60	0.29-0.25	27.8
	35	1	EL1x14-35s-u	A2	1	1	175	38	0.18-0.16	34.7
	35	2	EL2x14-35s-u	A2	2	4	250	75	0.35-0.31	34.7
	49	1	EL1x49s-u	A2	1	1	190	52.5	0.25-0.23	49.3
	49	2	EL2x49s-u	A2	2	4	260	104	0.50-0.45	49.3
	80	2	EL2x80s-u	A2 BAT	2	4	305	170	0.80-0.73	80

Note: *See pages 18-19 for connection diagrams and additional characteristics.*

Dimensions	1	2
Length 'a' (mm)	280	360
Width 'b' (mm)	30	30
Height 'c' (mm)	21	21
'd' (mm)	270	350

a

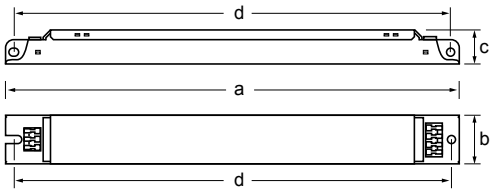

Delivery information

Ballast	Unit package		Transportation package		
	Minimum delivery amount	Plastic binding strip	One-way pallet 1200 x 820 (pcs.)	Pallet weight (kg)	Pallet height (cm)
EL1 x s-u	10	●	2000	350 - 420	57
EL2 x s-u	10	●	1500	395	57
EL3/4 x s-u	10	●	1500	390	57

Electronic ballasts for T5 eco fluorescent lamps

14-80 W 220-240 V, 50-60 Hz

- Only 21 mm high
- Optimal lamp operation
- Wide operational ambient temperature range
- Standard & sidemount possibilities
- With terminals for both manual and automatic wiring (IDC & push-in)
- Low power losses
- Silent operation
- Stabilized flickerfree light
- High power factor

A2

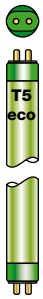

Lamp type	Wattage	No. of lamps	Ballast	EEI	Dimensions	Connection (p.18)	Weight (g)	Circuit power [1] (W)	Mains current [1] (A)	Lamp power [1] (W)
	14	1	EL1x14-35s-u	A2	1	1	175	13-15	0.08-0.06	11.3-13.4
	14	2	EL2x14-35s-u	A2	2	4	250	29.2-30.3	0.13-0.12	11.3-13.4
	14	3	EL3/4x14s-u	A2	1	7	210	38.8-43	0.19-0.17	12.1-13.7
	14	4	EL3/4x14s-u	A2	1	8	210	52.3-57.4	0.25-0.23	12.1-13.7
	21	1	EL1x14-35s-u	A2	1	1	175	19.5	0.09	17.7
	21	2	EL2x14-35s-u	A2	2	4	250	39.5	0.17	17.7
	24	3	EL3/4x24s-u	A2 BAT	1	7	215	64.3	0.28	19.4
	24	4	EL3/4x24s-u	A2 BAT	1	8	215	85	0.37	19.75
	28	1	EL1x14-35s-u	A2	1	1	175	28.6	0.12	25.8
	28	2	EL2x14-35s-u	A2	2	4	250	57.4	0.25	26.2
	35	1	EL1x14-35s-u	A2	1	1	175	35.3-37.4	0.16-0.15	32.5-34.3
	35	2	EL2x14-35s-u	A2	2	4	250	70.8-72.7	0.31-0.30	32.5-34.3
	49	1	EL1x49s-u	A2	1	1	190	46.8-48	0.21-0.20	43.4-47.4
	49	2	EL2x49s-u	A2	2	4	260	94-100.3	0.43-0.40	43.4-47.4
	80	2	EL2x80s-u	A2 BAT	2	4	305	151.8-161	0.70-0.65	71.2-76.2

1) Depending on difference in lamps from various manufacturers

Note: *See pages 18-19 for connection diagrams and additional characteristics.*

Dimensions	1	2
Length 'a' (mm)	280	360
Width 'b' (mm)	30	30
Height 'c' (mm)	21	21
'd' (mm)	270	350

a

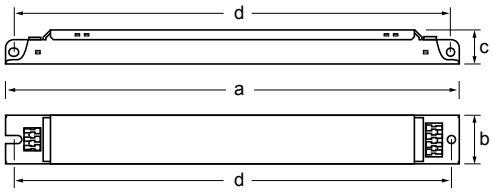

Delivery information

Ballast	Unit package		Transportation package		
	Minimum delivery amount	Plastic binding strip	One-way pallet 1200 x 820 (pcs.)	Pallet weight (kg)	Pallet height (cm)
EL1 x s-u	10	●	2000	350 - 420	57
EL2 x s-u	10	●	1500	395	57
EL3/4 x s-u	10	●	1500	390	57

Electronic ballasts for T8 fluorescent lamps

1

18-70 W 220-240 V, 50-60 Hz

- Only 21 mm high
- Optimal lamp operation
- Wide operational ambient temperature range
- Standard & sidemount possibilities
- Optional terminals for automatic wiring
- Low power losses
- Silent operation
- Stabilized flickerfree light
- High power factor

A2

Lamp type	Wattage	No. of lamps	Ballast	EEI	Dimensions	Connection (p.18)	Weight (g)	Circuit power (W)	Mains current (A)	Lamp power (W)
	18	1	EL1x18s	A2	1	1	190	18	0.09-0.08	16
	18	2	EL2x18s	A2	2	2	230	34.5	0.16-0.15	16
	18	3	EL3/4x18s	A2	2	5	250	52	0.25-0.23	16
	18	3	EL3/4x18s-u [2]	A2	3	7	210	52	0.25-0.23	16
	18	4	EL3/4x18s	A2	2	6	250	69	0.33-0.30	16
	18	4	EL3/4x18s-u [2]	A2	3	8	210	69	0.33-0.30	16
	32	1	EL1x49s [1]	A2	1	1	190	34.5	0.15	32
	32	2	EL2x49s [1]	A2	2	3	260	72	0.31	32
	36	1	EL1x36/40/18s	A2	1	1	190	35	0.16-0.15	32
	36	1	EL1x36/40s-u [2]	A2	3	1	190	35	0.16-0.15	32
	36	2	EL2x36/40s	A2	2	2	245	69	0.32-0.29	32
	36	2	EL2x36/40s-u [2]	A2	4	4	245	69	0.32-0.29	32
	58	1	EL1x58s	A2	1	1	200	54	0.26-0.23	50
	58	1	EL1x58s-u [2]	A2	3	1	200	54	0.26-0.23	50
	58	2	EL2x58s	A2	2	2	260	106.5	0.50-0.45	50
	58	2	EL2x58s-u [2]	A2	4	4	260	106.5	0.50-0.45	50
	70	1	EL1x70s	A2	1	1	200	64.5	0.30-0.28	60
	70	2	EL2x70s	A2	2	2	260	128	0.59-0.54	60

Note: *See pages 18-19 for connection diagrams and additional characteristics.*

1) Tested and recommended by Helvar, not ENEC approved

2) With terminals for both manual and automatic wiring (IDC & push-in)

Dimensions	1	2	3	4
drawing	a	a	b	b
Length 'a' (mm)	280	360	280	360
Width 'b' (mm)	30	30	30	30
Height 'c' (mm)	21	21	21	21
'd' (mm)	270	350	270	350

a

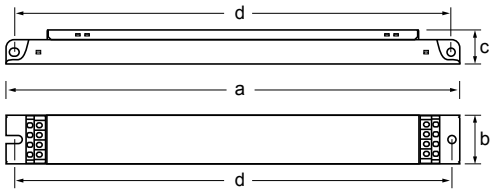

b

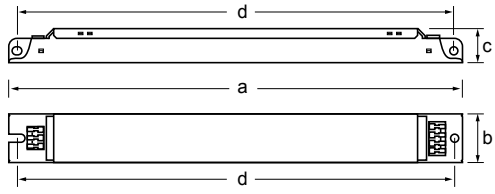

Delivery information

Ballast	Unit package		Transportation package		
	Minimum delivery amount	Plastic binding strip	One-way pallet 1200 x 820 (pcs.)	Pallet weight (kg)	Pallet height (cm)
EL1 x s	10	●	2000	350 - 420	57
EL2 x s	10	●	1500	395	57
EL3/4 x s	10	●	1500	385	57

Electronic ballasts for T8 fluorescent lamps

18-58 W 220-240 V, 50-60 Hz

- Energy saving
- Warm Start according to lamp standards
- Flickerless light
- Covers EMC requirements
- Low harmonics
- Low power losses
- Stabilized output

A2

Lamp type	Wattage	No. of lamps	Ballast	EEI	Dimensions	Connection (p.18)	Weight (g)	Circuit power (W)	Mains current (A)	Lamp power (W)
	18	1	EL1x18ngn	A2	1	1	190	19	0.09-0.08	16
	18	2	EL2x18ngn	A2	1	9	200	37	0.16-0.15	16
	18	4	EL4x18ngn	A2	1	10	200	72	0.33-0.30	16
	36	1	EL1x36ngn	A2	1	1	191	36	0.16-0.15	32
	36	2	EL2x36ngn	A2	1	9	205	71	0.32-0.29	32
	58	1	EL1x58ngn	A2	1	1	193	55	0.26-0.23	50
	58	2	EL2x58ngn	A2	1	9	218	108	0.50-0.45	50

Note: *See pages 18-19 for connection diagrams and additional characteristics.*

Dimensions	1
Length 'a' (mm)	280
Width 'b' (mm)	30
Height 'c' (mm)	28
'd' (mm)	270

a

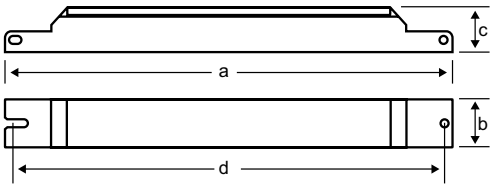

Delivery information

Ballast	Unit package		Transportation package		
	Minimum delivery amount	Plastic binding strip	One-way pallet 1200 x 820 (pcs.)	Pallet weight (kg)	Pallet height (cm)
EL1 x ngn	10	●	1600	330	60
EL2 x ngn	10	●	1600	320-360	60
EL4 x ngn	10	●	1600	370	60

Electronic ballasts for compact fluorescent lamps

1

18-80 W 220-240 V, 50-60 Hz

- Only 21 mm high
- Optimal lamp operation
- Wide operational ambient temperature range
- Standard & sidemount possibilities
- Low power losses
- Silent operation
- Stabilized flickerfree light
- High power factor

A2

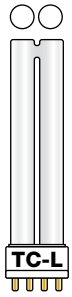

Lamp type	Wattage	No. of lamps	Ballast	EEI	Dimensions	Connection (p.18)	Weight (g)	Circuit power (W)	Mains current (A)	Lamp power (W)
	18	1	EL1x36/40/18s	A2	1	1	190	18	0.08	16
	18	1	EL1x36/40s-u [1) 2)]	A2	3	1	190	18	0.08	16
	24	1	EL1x24s	A2	1	1	190	25	0.12-0.11	22.5
	24	2	EL2x24s	A2	2	2	230	49	0.24-0.21	22.5
	24	3	EL3/4x24s-u [1)]	A2 BAT	3	7	215	73	0.34-0.30	22.5
	24	4	EL3/4x24s-u [1)]	A2 BAT	3	8	215	97	0.44-0.40	22.5
	26	1	EL1x14-35s [2)3)]	A2	1	1	175	27	0.12	24.5
	26	1	EL1x14-35s-u [2)3)]	A2	1	1	175	27	0.12	24.5
	26	2	EL2x14-35s [2)3)]	A2	2	3	250	55	0.24	24.5
	26	2	EL2x14-35s-u [2)3)]	A2	2	4	250	55	0.24	24.5
	28	1	EL1x14-35s [2)3)]	A2	1	1	175	27	0.12	24.5
	28	1	EL1x14-35s-u [2)3)]	A2	1	1	175	27	0.12	24.5
	28	2	EL2x14-35s [2)3)]	A2	2	3	250	55	0.24	24.5
	28	2	EL2x14-35s-u [2)3)]	A2	2	4	250	55	0.24	24.5
	36	1	EL1x39/36s	A2	1	1	190	35	0.16-0.15	32
	36	2	EL2x39/36s	A2	2	2	245	69	0.32-0.29	32
	40	1	EL1x36/40/18s	A2	1	1	190	45	0.20-0.18	40
	40	1	EL1x36/40s-u [1)]	A2	3	1	190	45	0.20-0.18	40
	40	2	EL2x36/40s	A2	2	2	245	87	0.40-0.36	40
	55	1	EL1x55s	A2	1	1	200	59.5	0.28-0.25	55
	55	2	EL2x55s	A2	2	2	260	117	0.55-0.50	55
	80	1	EL1x80s	A2	1	1	200	85	0.40-0.36	80
	80	2	EL2x80s-u [1)]	A2 BAT	4	4	305	170	0.80-0.73	80

Note: *See pages 18-19 for connection diagrams and additional characteristics.*
1) With terminals for both manual and automatic wiring(IDC & push-in)
2) Tested and recommended by Helvar, not ENEC approved
3) Cap 2GX11

Dimensions	1	2	3	4
drawing	a	a	b	b
Length 'a' (mm)	280	360	280	360
Width 'b' (mm)	30	30	30	30
Height 'c' (mm)	21	21	21	21
'd' (mm)	270	350	270	350

a

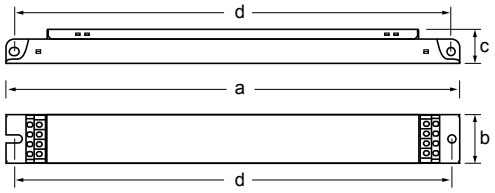

b

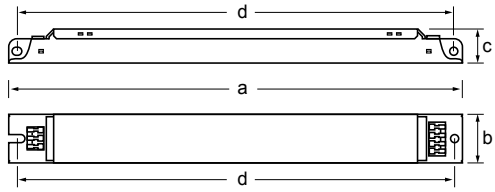

Delivery information

Ballast	Unit package		Transportation package		
	Minimum delivery amount	Plastic binding strip	One-way pallet 1200 x 820 (pcs.)	Pallet weight (kg)	Pallet height (cm)
EL1 x s	10	●	2000	350 - 420	57
EL2 x s	10	●	1500	395	57
EL3/4 x s	10	●	1500	390	57

Electronic ballasts for compact fluorescent lamps

18-80 W 220-240 V, 50-60 Hz

- Only 21 mm high
- Optimal lamp operation
- Wide operational ambient temperature range
- Standard & sidemount possibilities
- Low power losses
- Silent operation
- Stabilized flickerfree light
- High power factor

A2

Lamp type	Wattage	No. of lamps	Ballast	EEI	Dimensions	Connection (p.18)	Weight (g)	Circuit power (W)	Mains current (A)	Lamp power (W)
TC-F	18	1	EL1x36/40/18s	A2	1	1	190	18	0.08	16
	18	1	EL1x36/40s-u [1) 2)]	A2	3	1	190	18	0.08	16
	24	1	EL1x24s	A2	1	1	190	25	0.12-0.11	22.5
	24	2	EL2x24s	A2	2	2	230	49	0.24-0.21	22.5
	24	3	EL3/4x24s-u [1) 2) 3)]	A2 BAT	1	1	215	73	0.34-0.30	22.5
	24	4	EL3/4x24s-u [1) 2) 3)]	A2 BAT	2	2	215	97	0.44-0.40	22.5
	36	1	EL1x39/36s	A2	1	1	190	35	0.16-0.15	32
	36	2	EL2x39/36s	A2	2	2	245	69	0.32-0.29	32

Note: *See pages 18-19 for connection diagrams and additional characteristics.*

1) With terminals for both manual and automatic wiring(IDC & push-in)

2) Tested and recommended by Helvar, not ENEC approved

3) For 3/4x24W TC-F lamps, T_a= >18°C

Dimensions	1	2	3	4
drawing	a	a	b	b
Length 'a' (mm)	280	360	280	360
Width 'b' (mm)	30	30	30	30
Height 'c' (mm)	21	21	21	21
'd' (mm)	270	350	270	350

a

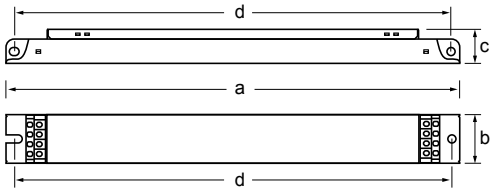

b

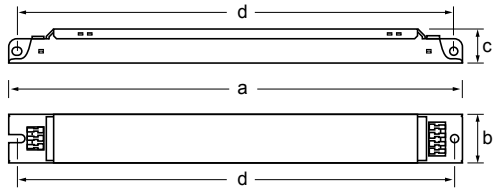

Delivery information

Ballast	Unit package		Transportation package		
	Minimum delivery amount	Plastic binding strip	One-way pallet 1200 x 820 (pcs.)	Pallet weight (kg)	Pallet height (cm)
EL1 x s	10	●	2000	350 - 420	57
EL2 x s	10	●	1500	395	57
EL3/4 x s	10	●	1500	390	57

Electronic ballasts for compact fluorescent lamps

1

10-40 W 220-240 V, 50-60 Hz

- Slim, only 28 mm high
- Multilamp operation
- Single and twin lamp operation
- Low power losses
- Single case size

A2

Lamp type	Wattage	No. of lamps	Ballast	EEI	Connection (p.18)	Weight (g)	Circuit power (W)	Mains current (A)	Power factor	Lamp power (W)
TC-L	18	1	EL1/2x18-42TCs	A2	11	132	17	0.08	0.94c	14.8
	18	1	EL1x18-42TCs	A2	13	125	17	0.08	0.94c	14.8
	18	2	EL1/2x18-42TCs	A2	12	132	32	0.14	0.97	14.8
	24	1	EL1/2x18-42TCs	A2	11	132	26	0.12	0.95	23
	24	1	EL1x18-42TCs	A2	13	125	26	0.12	0.95	23
	24	2	EL1/2x18-42TCs	A2	12	132	48	0.21	0.98	22.3
	36	1	EL1/2x36/38TCs	A2 BAT	11	132	37	0.17	0.96	34
	36	1	EL1x18-42TCs 1)2)	A2	13	125	31	0.14	0.96	28
	36	1	EL1/2x18-42TCs 1)2)	A2	12	132	31	0.14	0.96	28
	36	2	EL1/2x36/38TCs	A2 BAT	12	132	72	0.32	0.97	33
	40	1	EL1/2x18-42TCs 1)	A2	11	132	42	0.19	0.98	39
	40	1	EL1x18-42TCs	A2	13	125	42	0.19	0.98	39
TC-F	18	1	EL1/2x18-42TCs	A2	11	132	17	0.08	0.94c	14.8
	18	1	EL1x18-42TCs	A2	13	125	17	0.08	0.94c	14.8
	18	2	EL1/2x18-42TCs	A2	12	132	32	0.14	0.97	14.8
	24	1	EL1/2x18-42TCs	A2	11	132	26	0.12	0.95	23
	24	1	EL1x18-42TCs	A2	13	125	26	0.12	0.95	23
	24	2	EL1/2x18-42TCs	A2	12	132	48	0.21	0.98	22.3
	36	1	EL1/2x36/38TCs	A2 BAT	11	132	37	0.17	0.96	34
	36	1	EL1/2x18-42TCs 1)2)	A2	12	132	31	0.14	0.96	28
	36	2	EL1/2x36/38TCs	A2 BAT	12	132	72	0.32	0.97	33

Note: *See pages 18-19 for connection diagrams and additional characteristics.*

1) Tested and recommended by Helvar, not ENEC approved

2) Light output 93 %

Dimensions	
Length 'a' (mm)	103.5
Width 'b' (mm)	67
Height 'c' (mm)	28
'd' (mm)	83.5
'e' (mm)	57.5
'f' (mm)	93.5
'g' (mm)	25.5

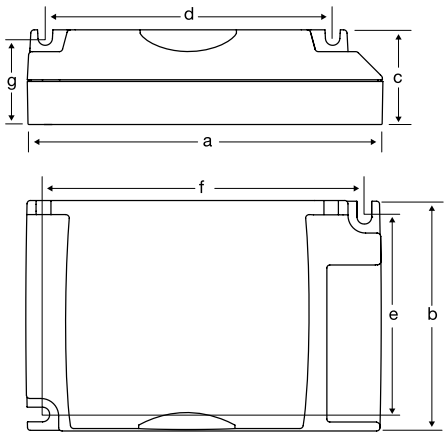

Delivery information

Ballast	Unit package		Transportation package		
	Minimum delivery amount	Carton Box	Pallet 820x1280 (pcs.)	Pallet weight (kg)	Pallet height (cm)
EL-TCs	60	●	1800	260	105

Electronic ballasts for compact fluorescent lamps

10-40 W 220-240 V, 50-60 Hz

- Slim, only 28 mm high
- Multilamp operation
- Single and twin lamp operation
- Low power losses
- Single case size

A2

Lamp type	Wattage	No. of lamps	Ballast	EEI	Connection (p.18)	Weight (g)	Circuit power (W)	Mains current (A)	Power factor	Lamp power (W)
TC-DD	10	1	EL1/2x9-13TCs	A2	11	118	12	0.05	0.91c	10.0
	16	1	EL1/2x9-13TCs	A2	11	118	17	0.08	0.95	15
	21	1	EL1/2x18-42TCs 1)	A2	11	132	25	0.11	0.97	22.3
	28	1	EL1/2x18-42TCs	A2	11	132	29	0.13	0.97	27.0
	38	1	EL1/2x36/38TCs	A2 BAT	11	132	38	0.17	0.96	34.8
	38	2	EL1/2x36/38TCs	A2 BAT	12	132	74	0.32	0.97	34
T5c	22	1	EL1/2x18-42TCs	A2	11	132	25	0.12	0.95	22.6
	22	1	EL1x18-42TCs	A2	13	125	25	0.12	0.95	22.6
	40	1	EL1/2x18-42TCs	A2	11	132	41	0.19	0.98	38.6
	40	1	EL1x18-42TCs	A2	11	125	41	0.19	0.98	38.6
T5	14	1	EL1/2x9-13TCs 1)	A2	11	118	16	0.07	0.95	14.7
	21	1	EL1/2x9-13TCs 1)	A2	11	118	22.5	0.10	0.97	21
	28	1	EL1/2x9-13TCs 1)	A2	11	118	31	0.14	0.97	28.2
T8	30	2	EL2x32/42TCs 1)	A2	11	132	57.5	0.25	0.97	26.6
TC-SE	9	1	EL1/2x9-13TCs	A2	11	118	10	0.05	0.9c	8.5
	9	1	EL1x9-13TCs	A2	13	110	10	0.05	0.9c	8.5
	9	2	EL1/2x9-13TCs	A2	12	118	18	0.08	0.96	8.5
	11	1	EL1/2x9-13TCs	A2	11	118	14	0.07	0.93c	12.8
	11	1	EL1x9-13TCs	A2	13	110	14	0.07	0.93c	12.8
	11	2	EL1/2x9-13TCs	A2	12	118	27	0.12	0.98	12.9

Note: *See pages 18-19 for connection diagrams and additional characteristics.*

1) Tested and recommended by Helvar, not ENEC approved

Dimensions	
Length 'a' (mm)	103.5
Width 'b' (mm)	67
Height 'c' (mm)	28
'd' (mm)	83.5
'e' (mm)	57.5
'f' (mm)	93.5
'g' (mm)	25.5

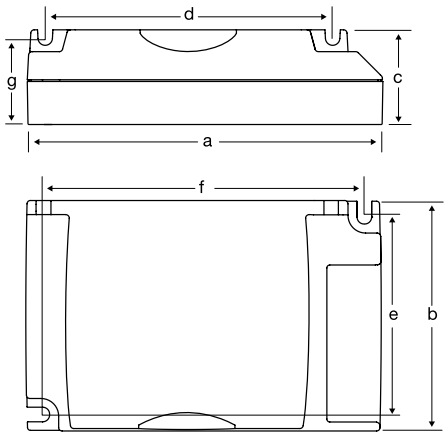

Delivery information

Ballast	Unit package		Transportation package		
	Minimum delivery amount	Carton Box	Pallet 820x1280 (pcs.)	Pallet weight (kg)	Pallet height (cm)
EL-TCs	60	●	1800	260	105

Electronic ballasts for compact fluorescent lamps

1

9-26 W 220-240 V, 50-60 Hz

- Slim only 28 mm high
- Multilamp operation
- Single and twin lamp operation
- Low power losses
- Single case size

A2

Lamp type	Wattage	No. of lamps	Ballast	EEI	Connection (p.18)	Weight (g)	Circuit power (W)	Mains current (A)	Power factor	Lamp power (W)
TC-DE	10	1	EL1/2x9-13TCs	A2	11	118	10	0.05	0.9c	8.9
	10	1	EL1x9-13TCs	A2	13	110	10	0.05	0.9c	8.9
	10	2	EL1/2x9-13TCs	A2	12	118	20	0.09	0.97	8.9
	13	1	EL1/2x9-13TCs	A2	11	118	15	0.07	0.94c	13.8
	13	1	EL1x9-13TCs	A2	13	110	15	0.07	0.94c	13.8
	13	2	EL1/2x9-13TCs	A2	12	118	28	0.13	0.98	13.5
	18	1	EL1/2x18TCs	A2	11	120	19	0.09	0.96	16.9
	18	1	EL1x18TCs	A2	13	113	19	0.09	0.96	16.9
	18	2	EL1/2x18TCs	A2	12	120	36	0.16	0.98	16.9
	26	1	EL1/2x18-42TCs	A2	11	132	27	0.13	0.96	24.7
	26	1	EL1x18-42TCs	A2	13	125	27	0.13	0.96	24.7
	26	2	EL1/2x18-42TCs	A2	12	132	51	0.23	0.98	23.8
	26	2	EL2x32/42TCs	A2	12	132	53	0.24	0.97	24
PL-R	14	1	EL1/2x14/17TCs [1)]	A2 BAT	11	131	18	0.08	0.92c	15.8
	14	1	EL1x14/17TCs [1)]	A2 BAT	13	126	18	0.08	0.92c	15.8
	14	2	EL1/2x14/17TCs [1)]	A2 BAT	12	131	34	0.15	0.96	15.5
	17	1	EL1/2x14/17TCs [1)]	A2 BAT	11	131	21.5	0.1	0.93c	19.3
	17	1	EL1x14/17TCs [1)]	A2 BAT	13	126	21.5	0.1	0.93c	19.3
	17	2	EL1/2x14/17TCs	A2 BAT	12	131	41	0.18	0.96	18.6

1) Ballast Lumen Factor for 1x14 W, 2x14 W, 1x17 W: 107 %

Note: *See pages 18-19 for connection diagrams and additional characteristics.*

Dimensions	
Length 'a' (mm)	103.5
Width 'b' (mm)	67
Height 'c' (mm)	28
'd' (mm)	83.5
'e' (mm)	57.5
'f' (mm)	93.5
'g' (mm)	25.5

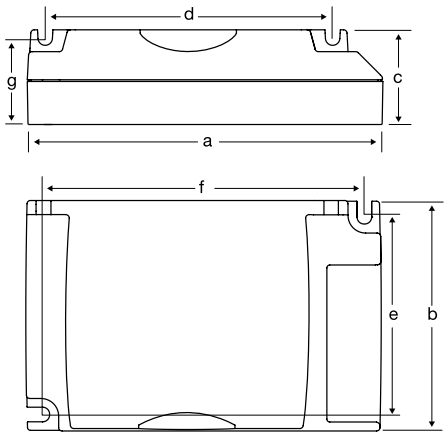

Delivery information

Ballast	Unit package		Transportation package		
	Minimum delivery amount	Carton Box	Pallet 820x1280 (pcs.)	Pallet weight (kg)	Pallet height (cm)
EL-TCs	60	●	1800	260	105

Electronic ballasts for compact fluorescent lamps

13-57 W 220-240 V, 50-60 Hz

- Slim only 28 mm high
- Multilamp operation
- Single and twin lamp operation
- Low power losses
- Single case size

A2

Lamp type	Wattage	No. of lamps	Ballast	EEI	Connection (p.18)	Weight (g)	Circuit power (W)	Mains current (A)	Power factor	Lamp power (W)
TC-TE	13	1	EL1/2x9-13TCs	A2	11	118	15	0.07	0.94c	13.8
	13	1	EL1x9-13TCs	A2	13	110	15	0.07	0.94c	13.8
	13	2	EL1/2x9-13TCs	A2	12	118	28	0.13	0.98	13.5
	18	1	EL1/2x18TCs	A2	11	120	19	0.09	0.96	16.9
	18	1	EL1x18TCs	A2	13	113	19	0.09	0.96	16.9
	18	2	EL1/2x18TCs	A2	12	120	36	0.16	0.98	16.9
	26	1	EL1/2x18-42TCs	A2	11	131	27	0.13	0.96	24.7
	26	1	EL1x18-42TCs	A2	13	125	27	0.13	0.96	24.7
	26	2	EL1/2x18-42TCs	A2	12	131	51	0.23	0.98	23.8
	26	2	EL2x32/42TCs	A2	12	131	53	0.24	0.97	24
	32	1	EL1/2x18-42TCs	A2	11	131	32	0.15	0.97	29.4
	32	1	EL1x18-42TCs	A2	13	125	32	0.15	0.97	29.4
	32	2	EL2x32/42TCs	A2	12	131	64	0.29	0.98	28.5
	42	1	EL1/2x18-42TCs	A2	11	131	44	0.2	0.98	42.2
	42	1	EL1x18-42TCs	A2	13	125	44	0.2	0.98	42.2
	42	2	EL2x32/42TCs	A2	12	131	85	0.38	0.98	40.5
	57	1	EL1/2x18-42TCs	A2	11	131	58.5	0.26	0.99	54
	57	1	EL1x18-42TCs	A2	13	125	58.5	0.26	0.99	54

Note: *See pages 18-19 for connection diagrams and additional characteristics.*

Dimensions	
Length 'a' (mm)	103.5
Width 'b' (mm)	67
Height 'c' (mm)	28
'd' (mm)	83.5
'e' (mm)	57.5
'f' (mm)	93.5
'g' (mm)	25.5

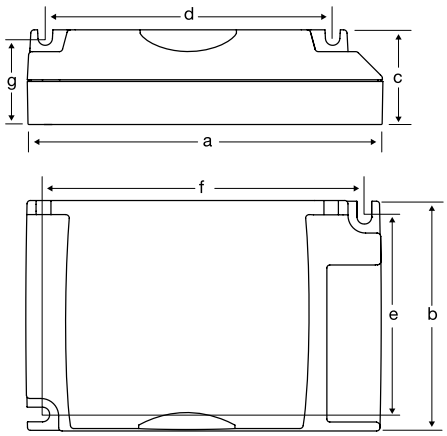

Delivery information

Ballast	Unit package		Transportation package		
	Minimum delivery amount	Carton Box	Pallet 820x1280 (pcs.)	Pallet weight (kg)	Pallet height (cm)
EL-TCs	60	●	1800	260	105

Connection diagrams

1

EL-s, EL-su, EL-ngn, EL-TCs

NOTE: *All wiring to the connectors marked with a red dot (hot wires) should be as short as possible.*

1

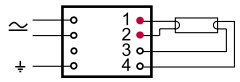

2

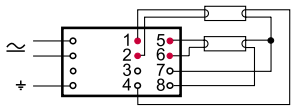

3

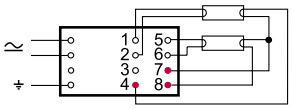

4

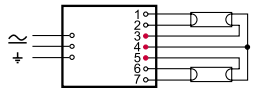

5

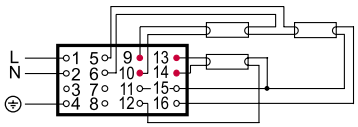

6

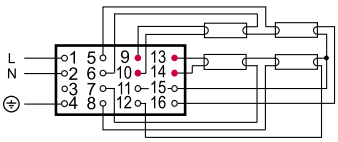

7

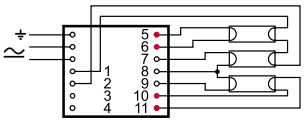

8

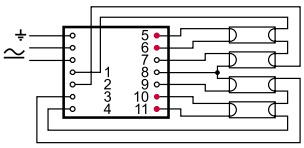

9

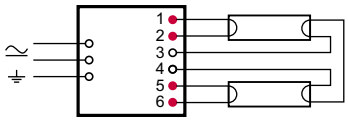

10

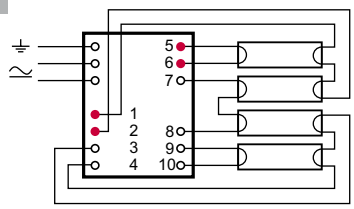

11

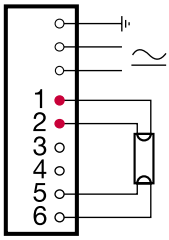

12

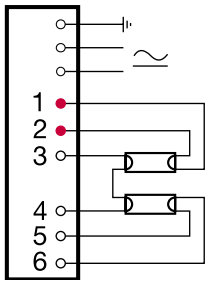

13

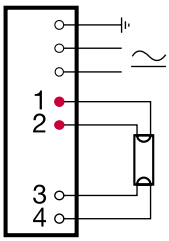

1	EL1x ...s, EL1x...ngn
2	EL2x18s, EL2x24s, EL2x36/40s, EL2x39/36s, EL2x54s, EL2x55s, EL2x58s, EL2x70s
3	EL2x14-35s, EL2x49s
4	EL2x14-35s-u, EL2x36/40s-u, EL2x49s-u, EL2x58s-u, EL2x80s-u
5	EL3/4x14s, EL3/4x18s (three lamp connection)
6	EL3/4x14s, EL3/4x18s (four lamp connection)
7	EL3/4x14s-u, EL3/4x18s-u, EL3/4x24s-u (three lamp connection)
8	EL3/4x14s-u, EL3/4x18s-u, EL3/4x24s-u (four lamp connection)
9	EL2x18ngn, EL2x36ngn, EL2x58ngn
10	EL4x18ngn
11	EL1/2x14/17TCs , EL1/2x18-42TCs, EL1/2x18TCs, EL1/2x9-13TCs, EL1/2x36/38TCs
12	EL1/2x14/17TCs , EL1/2x18-42TCs, EL1/2x18TCs, EL1/2x9-13TCs, EL2x32/42TCs, EL1/2x36/38TCs
13	EL1x14/17TCs , EL1x18-42TCs, EL1x18TCs, EL1x9-13TCs

Characteristics

	EL-s / EL-su	EL-ngn	EL-TCs
Max.temperature at t_C point	75 °C [3) 4)]	75 °C	75 °C
Ambient temperature range	-20…+50 °C [7)]	-20...+50 °C	-20…+50 °C
Storage temperature range	-40…+80 °C	-40...+80 °C	-40…+80 °C
Maximum relative humidity	no condensation	no condensation	no condensation
Number of starts per lamp	> 50 000	> 50 000	> 50 000
AC Range	198-264 VAC [5)6)]	198-264 VAC	198-264 VAC
DC range (starting voltage >190VDC)	176-280 VDC [6)]	176-280 VDC	176-280 VDC [1)]
Over voltage duration	320 VAC, 1 h	320 VAC, 1 h	320 V / 1 h
Power factor (at maximum), typical	0.98	0.98	> 0.95
Earth leakage current	< 0.4 mA	< 0.4 mA	< 0.4 mA
Maximum working voltage (Uout)	400 V	350 V	250 V [2)]
Lifetime (90 % survival)	50 000 h, at t_C	50 000 h, at t_C	50 000 h, at t_C
Max length of ballast to lamp wiring	2 m	1.5 m	1 m / 2 m (hot / cold)
Ignition time, typical	~1.0 s	< 1 s	~1 s

1) For 2 x 42 W lamp, DC range is 190-280 V
2) EL2x32/42TCs 300 V
3) For EL 3/4x14s and EL 3/4x18s, t_C = 80 °C
4) For EL 2x70s, t_C = 70 °C
5) For EL2x70s and EL2x80s-u AC range is 204-264 V
6) EL2x70s, EL2x55s and EL2x80s-u max 6 hours at 176-190 VDC
7) For 3/4x24W TC-F lamps, T_a= >18°C

Standards

	EL-s / EL-su	EL-ngn	EL-TCs
General and safety requirements EN61347-2-3	●	●	●
Additional safety requirements for AC/DC supplied ballasts acc. to EN61347-2-3 Annex J	●	●	●
Performance requirements EN60929	●	●	●
Preheat starting	●	●	●
Lamp life acc. to EN60081 / EN60901 *)	●	●	●
Mains current harmonics, acc. to EN61000-3-2	●	●	●
Radio Frequency Interference, acc. to EN55015	●	●	●
Immunity standard, acc.to EN61547	●	●	●
Vibration test EN60068-2-64 test Fh	●	●	●
Bump test EN60068-2-29 test Eb	●	●	●
Thermal protection class EN61347, C5e	●	●	●

** EN 60081 for T5 & T8 fluorescent lamps, EN 60901 for compact fluorescent lamps*

EL-sc – the analogue solution

These controllable ballasts, utilising the well established 1-10 VDC analogue control, offer the most efficient energy-saving solutions for commercial lighting.

The fully electronic, microprocessor-controlled EL-sc ballasts offer significant performance advantages over other solutions, especially with regard to energy efficiency, lighting quality and comfort.

In addition, the EL-sc range has a multi-control feature allowing for dimming either by an analogue 1-10 VDC signal or by a contact closure (Switch-Control). This dimming method is unique in that both control methods can be used simultaneously, offering a high degree of flexibility in lighting design.

OCC™ - Optimum Cathode Control

The proven OCC™ - Optimum Cathode Control technology used in Helvar EL-s, EL-sc, EL-iDim and EL-TCs electronic ballast ranges.

OCC™ ensures that the electrical parameters supplied to the lamp are always optimum, minimising system losses and maximising lamp lifetime. The achieved energy saving is considerable compared to existing ballasts on the market.

Controllable (1-10 V) electronic ballasts for T5 fluorescent lamps

14-80 W 220-240 V, 50-60 Hz

- Switch-Control / Analogue control [1)]
- Only 21 mm high
- Standard & Side mounting
- Dimming range 1-100 % [2)]
- Microprocessor controlled
- User friendly, quick release connectors
- Low energy consumption
- Stabilised, flickerfree light output

A1

Lamp type	Wattage	No. of lamps	Ballast	EEI	Dimensions	Connection (p.26)	Weight (g)	Circuit power (W)	Mains current (A)	Lamp power (W)
	14	1	EL1x14sc	A1	1	1	270	17	0.08-0.07	13.7
	14	2	EL2x14sc	A1	2	2	340	31	0.15-0.14	13.7
	14	4	EL4x14sc [2)]	A1	2	3	340	62	0.29-0.27	13.7
	21	1	EL1x21sc	A1	1	1	270	24	0.11-0.10	20.7
	21	2	EL2x21sc	A1	2	2	340	46	0.22-0.20	20.7
	24	1	EL1x24sc	A1	1	1	270	26	0.13-0.12	22.5
	24	2	EL2x24sc	A1	2	2	340	50	0.24-0.20	22.5
	28	1	EL1x28sc	A1	1	1	270	31	0.15-0.14	27.8
	28	2	EL2x28sc	A1	2	2	340	64	0.30-0.28	27.8
	35	1	EL1x35sc	A1	1	1	270	39	0.18-0.17	34.7
	35	2	EL2x35sc	A1	2	2	340	78	0.36-0.34	34.7
	39	1	EL1x39sc	A1	1	1	270	42	0.20-0.18	38
	39	2	EL2x39sc	A1	2	2	340	83	0.40-0.36	38
	49	1	EL1x49sc	A1	1	1	270	55	0.25-0.23	49.3
	49	2	EL2x49sc	A1	2	2	340	106	0.50-0.46	49.3
	54	1	EL1x54sc	A1	1	1	270	61	0.28-0.26	53.8
	54	2	EL2x54sc	A1	2	2	340	118	0.53-0.49	53.8
	80	1	EL1x80sc	A1	1	1	270	88	0.41-0.38	80

Note: *See pages 26-28 for connection diagrams and additional characteristics.*

1) Simultaneous lighting control by Switch-Control and Analogue control

2) Dimming range 3-100 % for EL 4x14sc

Dimensions	1	2
Length'a' (mm)	360	430
Width 'b' (mm)	30	30
Height 'c' (mm)	21	21
'd' (mm)	350	420

a

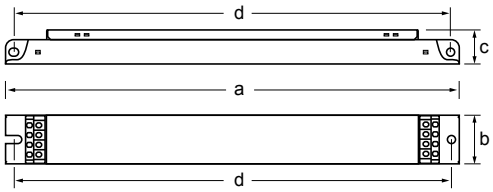

Delivery information

Ballast	Unit package		Transportation package		
	Minimum delivery amount	Plastic binding strip	EUR pallet 1200 x 800 (pcs.)	Pallet weight (kg)	Pallet height (cm)
EL1 x sc	10	●	980	300	40
EL2 x sc	10	●	840	325	43
EL4 x sc	10	●	840	325	43

Controllable (1-10 V) electronic ballasts for T5-eco fluorescent lamps

14-80 W 220-240 V, 50-60 Hz

- Switch-Control / Analogue control [1)]
- Only 21 mm high
- Standard & Side mounting
- Dimming range 1-100 % [2)]
- Microprocessor controlled
- User friendly, quick release connectors
- Low energy consumption
- Stabilised, flickerfree light output

A1

Lamp type	Wattage	No. of lamps	Ballast	EEI	Dimensions	Connection (p.26)	Weight (g)	Circuit power [3)] (W)	Mains current [3)] (A)	Lamp power [3)] (W)
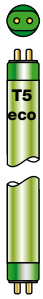	14	1	EL1x14sc	A1	1	1	270	17.3-17.4	0.08	13.6-14.5
	14	2	EL2x14sc	A1	2	2	340	31.4-32.7	0.14	13.6-14.5
	14	4	EL4x14sc [2)]	A1	2	3	340	62.9-63	0.27	12.3-14.3
	24	1	EL1x24sc	A1	1	1	270	25.3	0.11	20.5-21.7
	24	2	EL2x24sc	A1	2	2	340	46.7	0.20	20.5-21.7
	28	1	EL1x28sc	A1	1	1	270	32.7	0.14	27.8-29.2
	28	2	EL2x28sc	A1	2	2	340	62	0.27	27.8-29.2
	35	1	EL1x35sc	A1	1	1	270	39.9	0.17	34.7-37.8
	35	2	EL2x35sc	A1	2	2	340	80.3	0.35	34.7-37.8
	49	1	EL1x49sc	A1	1	1	270	53.7	0.24	49.3-50.3
	49	2	EL2x49sc	A1	2	2	340	100.6-107.8	0.46-0.43	49.3-50.3
	54	1	EL1x54sc	A1	1	1	270	59.4-60.8	0.26	53.8-57
	54	2	EL2x54sc	A1	2	2	340	121.8-126.1	0.54-0.52	53.8-57
	80	1	EL1x80sc	A1	1	1	270	77-80	0.35-0.33	70.6-73.8

Note: *See pages 26-28 for connection diagrams and additional characteristics.*

1) Simultaneous lighting control by Switch-Control and Analogue control

2) Dimming range 3-100 % for EL 4x14sc

3) Depending on difference in lamps from various manufacturers

Dimensions	1	2
Length'a' (mm)	360	430
Width 'b' (mm)	30	30
Height 'c' (mm)	21	21
'd' (mm)	350	420

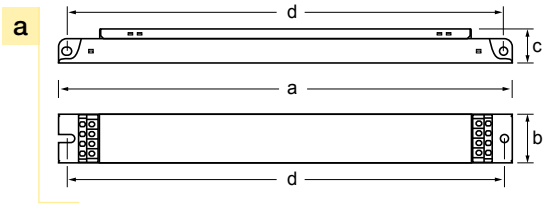

Delivery information

Ballast	Unit package		Transportation package		
	Minimum delivery amount	Plastic binding strip	EUR pallet 1200 x 800 (pcs.)	Pallet weight (kg)	Pallet height (cm)
EL1 x sc	10	●	980	300	40
EL2 x sc	10	●	840	325	43
EL4 x sc	10	●	840	325	43

Controllable (1-10 V) electronic ballasts for T8 fluorescent lamps

18-70 W 220-240 V, 50-60 Hz

- Switch-Control / Analogue control [1)]
- Only 21 mm high
- Standard & Side mounting
- Dimming range 1-100 % [2)]
- Microprocessor controlled
- User friendly, quick release connectors
- Low energy consumption
- Flickerless light

A1

Lamp type	Wattage	No. of lamps	Ballast	EEI	Dimensions	Connection (p.26)	Weight (g)	Circuit power (W)	Mains current (A)	Lamp power (W)
	18	1	EL1x18sc	A1	1	1	270	19	0.09-0.08	16
	18	2	EL2x18sc	A1	2	2	340	37	0.18-0.15	16
	18	4	EL4x18sc [2)]	A1	2	3	340	72	0.33-0.30	16
	36	1	EL1x36sc	A1	1	1	270	37	0.17-0.16	32
	36	2	EL2x36sc	A1	2	2	340	71	0.33-0.30	32
	58	1	EL1x58sc	A1	1	1	270	55	0.27-0.26	50
	58	2	EL2x58sc	A1	2	2	340	108	0.50-0.46	50
	70	1	EL1x70sc	A1	1	1	270	65	0.31-0.27	60

Note: *See pages 26-28 for connection diagrams and additional characteristics.*

1) Simultaneous lighting control by Switch-Control and Analogue control

2) Dimming range 3-100 % for 4x18sc

Dimensions	1	2
Length 'a' (mm)	360	430
Width 'b' (mm)	30	30
Height 'c' (mm)	21	21
'd' (mm)	350	420

a

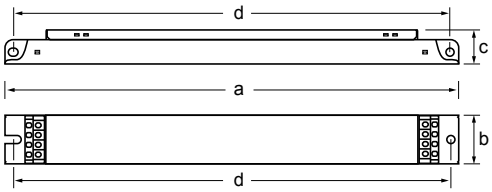

Delivery information

Ballast	Unit package		Transportation package		
	Minimum delivery amount	Plastic binding strip	EUR pallet 1200 x 800 (pcs.)	Pallet weight (kg)	Pallet height (cm)
EL1 x sc	10	●	980	300	40
EL2 x sc	10	●	840	325	43
EL4 x sc	10	●	840	325	43

Controllable (1-10 V) electronic ballasts for compact fluorescent lamps

24-80 W 220-240 V, 50-60 Hz

- Switch-Control / Analogue control [1)]
- Only 21 mm high
- Standard & Side mounting
- Dimming range 1-100 %
- Microprocessor controlled
- User friendly, quick release connectors
- Low energy consumption
- Flickerless light

A1

Lamp type	Wattage	No. of lamps	Ballast	EEI	Dimensions	Connection (p.26)	Weight (g)	Circuit power (W)	Mains current (A)	Lamp power (W)
TC-L	24	1	EL1x24sc [2)]	A1	1	1	270	26	0.13-0.12	24
	24	2	EL2x24sc [2)]	A1	2	2	340	50	0.24-0.20	24
	36	1	EL1x36sc	A1	1	1	270	37	0.17-0.16	32
	36	2	EL2x36sc	A1	2	2	340	71	0.33-0.30	32
	40	1	EL1x39sc [2)]	A1	1	1	270	44	0.20-0.18	40
	40	2	EL2x39sc [2)]	A1	2	2	340	84	0.40-0.36	40
	55	1	EL1x55sc	A1	1	1	270	61	0.28-0.26	55
	55	2	EL2x55sc	A1	2	2	340	117	0.53-0.49	55
	80	1	EL1x80sc [2)]	A1	1	1	270	88	0.41-0.38	80
TC-F	24	1	EL1x24sc [2)]	A1	1	1	270	26	0.13-0.12	24
	24	2	EL2x24sc [2)]	A1	2	2	340	50	0.24-0.20	24
	36	1	EL1x36sc [2)]	A1	1	1	270	37	0.17-0.16	32
	36	2	EL2x36sc [2)]	A1	2	2	340	71	0.33-0.30	32
T5c	40	1	EL1x39sc [2)]	A1	1	1	270	43	0.20-0.18	40

Note: *See pages 26-28 for connection diagrams and additional characteristics.*

1) Simultaneous lighting control by Switch-Control and Analogue control

2) Tested and recommended by Helvar, not ENEC approved combination

Dimensions	1	2
Length 'a' (mm)	360	430
Width 'b' (mm)	30	30
Height 'c' (mm)	21	21
'd' (mm)	350	420

a

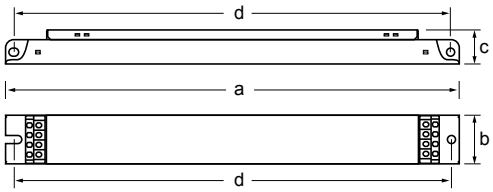

Delivery information

Ballast	Unit package		Transportation package		
	Minimum delivery amount	Plastic binding strip	EUR pallet 1200 x 800 (pcs.)	Pallet weight (kg)	Pallet height (cm)
EL1 x sc	10	●	980	300	40
EL2 x sc	10	●	840	325	43

Connection diagrams

EL-sc

NOTE: *All wiring to the connectors marked with a red dot (hot wires) should be as short as possible.*

1

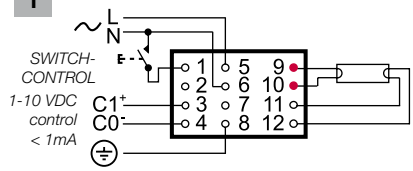

2

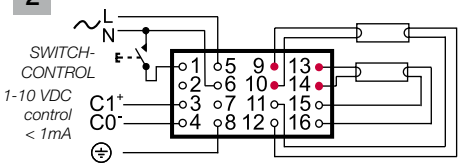

3

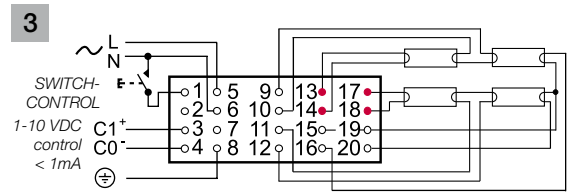

1	EL1x ...sc
2	EL2x ...sc
3	EL4x ...sc

Characteristics

	EL-sc
Max.temperature at t_C point	80 °C
Ambient temperature range	+10…+50 °C [1)]
Storage temperature range	-40…+80 °C
Maximum relative humidity	no condensation
Number of starts per lamp	> 50 000
AC Range	198-264 VAC
DC range (starting voltage >190VDC)	176-280 VDC
Over voltage duration	320 VAC, 1 h
Power factor (at maximum), typical	0.98
Earth leakage current	< 0.4 mA
Maximum working voltage (Uout)	400 V
Lifetime (90 % survival)	50 000 h, at 70 °C t_c
Max length of ballast to lamp wiring	1.5 m/2 m (hot/cold)[2)]
Ignition time, typical	<1.3 s

1) To ensure stable operation of TC-L lamps in ambient temperatures below 18°C it is not recommended to dim the light level below 3 %
2) For TC-L lamps 1 m/2 m (hot/cold lamp wires)

Standards

	EL-sc
General and safety requirements EN61347-2-3	●
Performance requirements EN60929	●
Preheat starting	●
Lamp life acc. to EN60081 / EN60901 *)	●
Mains current harmonics, acc. to EN61000-3-2	●
Radio Frequency Interference, acc. to EN55015	●
Immunity standard, acc.to EN61547	●
Vibration test EN60068-2-64 test Fh	●
Bump test EN60068-2-29 test Eb	●
Thermal protection class EN61347, C5e	●

** EN 60081 for T5 & T8 fluorescent lamps, EN 60901 for compact fluorescent lamps*

Switch-Control information, EL-sc ballasts

Switch-Control provides ON/OFF switching and UP/DOWN dimming functionality from one or more simple switches. Switch-Control can be used together and simultaneously with other compatible control devices.

- EL-sc ballasts and analogue 1-10 V control.

Suitable switch:

- Automatic return type. Mains rated (Mains is still present at the ballast terminals if the lamps are switched off from Switch-Control).
- The switch should withstand a short circuit current of:
  - 0.2 mA per ballast

Connection:

- Between the Switch-Control input and N (or L).
- Wire length: 200 m maximum.
- Ballasts per switch: 50 (observe above).
- Ensure all ballasts and associated switches are connected to the same mains phase.

Operation:

- Switch off: Short push of the switch (<0.4 second).
- Switch on: Short push of the switch (<0.4 second).
  - Re-strike within 3 seconds of switch off is prevented to ensure optimal lamp warm start.
  - EL-sc ballasts will switch on to the analogue control set level.
- Dimming: Long push of the switch (>0.5 second).
  - If lamps are off, the ballast dims up from minimum.
  - If lamps are on, the ballast dims in the opposite direction to previously.

Regaining analogue control when Switch-Control is active:

- Dim the analogue control device from min. to max. and back to minimum within 1 second.

Correction of out of sequence operation:

- Switch the mains supply off and on, or…
- Long push (until all lamps are on), then a short push (all lamps off), then wait 3 seconds and switch on (short push).

Compatibility:

Some ballasts manufacturers have functionality similar to Helvar Switch-Control. In most cases these methods are NOT COMPATIBLE with each other.

Connection

Between the Switch-Control input (pin1) and L (or N).

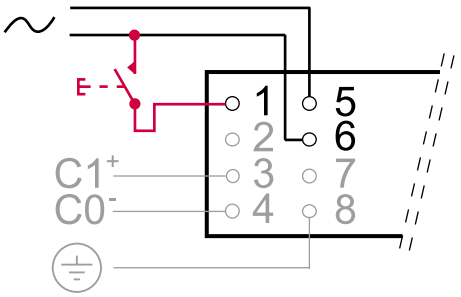

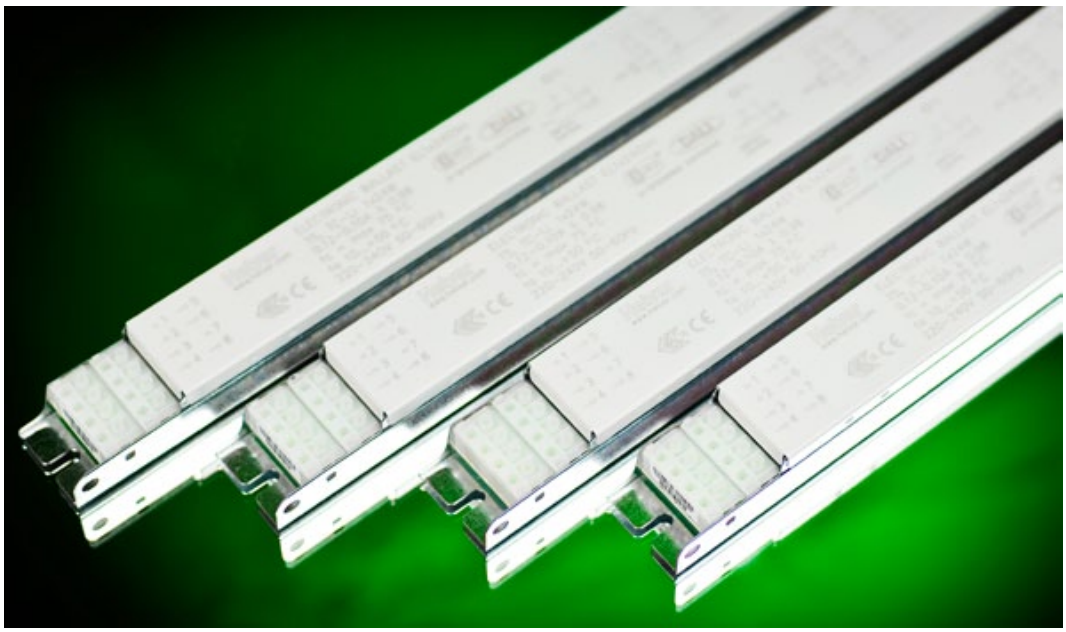

DALI electronic ballasts

EL-iDim / EL-iDim-c DALI ballasts are designed for a broad range of applications from the smallest intelligent luminaires to major lighting installations in large building complexes. What's more, they offer the important advantage of enabling everything to be achieved with the same ballasts. EL-iDim / EL-iDim-c DALI ballasts are also fully compatible with Helvar iDim sensors, the combination creating the latest high-tech innovation available to the lighting market.

With out-of-box functionality, the Helvar system is moreover, easy to install and use, and maintenance costs are always kept to a minimum.

In the design of EL-iDim / EL-iDim-c, customer input played a crucial role – leading to superior features such as:

- OCC technology, guaranteeing the highest possible EEI = A1 BAT
- The lowest stand-by power in the market, which even today meets the upcoming EuP directives of 2012
- Smooth and stepless dimming from 100 % to 1 %
- Multi-lamp operation, allowing one ballast to drive all HE-T5 lamps
- Multi-lamp operation between several compact lamps
- EL-iDim-c ballast are suitable for use both in single and twin lamp operation

The ballasts also have an in-built data register capable of storing information on running hours, energy consumption, mains voltage, lamp voltage etc. This can be very useful in large installations where the control and maintenance of lighting is centralized in one monitoring room.

OCC™ - Optimum Cathode Control

The proven OCC™ - Optimum Cathode Control technology used in Helvar EL-s, EL-sc, EL-iDim and EL-TCs electronic ballast ranges.

OCC™ ensures that the electrical parameters supplied to the lamp are always optimum, minimising system losses and maximising lamp lifetime. The achieved energy saving is considerable compared to existing ballasts on the market.

Digital DALI electronic ballasts for T5 fluorescent lamps

14-80 W 220-240 V, 50-60 Hz

- Digital DALI control
- Switch-Control
- Stand-by consumption 0.3 W
- Dimming range 1-100 % *)
- Only 21 mm high
- Microprocessor controlled
- Standard & Side mounting
- User friendly, quick release connectors

A1 BAT

Lamp type	Wattage	No. of lamps	Ballast	EEI	Dimensions	Connection (p.35)	Weight (g)	Circuit power (W)	Mains current (A)	Lamp power (W)
	14	1	EL1x14-35iDim	A1 BAT	1	1	250	17	0.08-0.07	13.7
	14	2	EL2x14-35iDim	A1 BAT	2	2	330	32.5	0.15-0.14	13.7
	14	3	EL3x14iDim	A1 BAT	2	3	310	47.5	0.22-0.20	13.7
	14	4	EL4x14iDim	A1 BAT	2	4	330	62	0.29-0.27	13.7
	21	1	EL1x14-35iDim	A1 BAT	1	1	250	23.5	0.11-0.10	20.7
	21	2	EL2x14-35iDim	A1 BAT	2	2	330	46	0.22-0.20	20.7
	24	1	EL1x24iDim	A1 BAT	1	1	250	25.5	0.12-0.10	22.5
	24	2	EL2x24iDim	A1 BAT	2	2	330	50.5	0.23-0.21	22.5
	28	1	EL1x14-35iDim	A1 BAT	1	1	250	32	0.15-0.14	27.8
	28	2	EL2x14-35iDim	A1 BAT	2	2	330	62	0.28-0.26	27.8
	35	1	EL1x14-35iDim	A1 BAT	1	1	250	39	0.18-0.17	34.7
	35	2	EL2x14-35iDim	A1 BAT	2	2	330	73.5	0.36-0.30	34.7
	39	1	EL1x39iDim	A1 BAT	1	1	250	42.5	0.20-0.18	38
	39	2	EL2x39iDim	A1 BAT	2	2	330	82.5	0.38-0.35	38
	49	1	EL1x49iDim	A1 BAT	1	1	250	55	0.25-0.23	49.3
	49	2	EL2x49iDim	A1 BAT	2	2	330	107.5	0.49-0.45	49.3
	54	1	EL1x54iDim	A1 BAT	1	1	250	59	0.27-0.25	53.8
	54	2	EL2x54iDim	A1 BAT	2	2	330	117	0.53-0.49	53.8
	80	1	EL1x80iDim	A1 BAT	1	1	250	86	0.39-0.36	80
	80	2	EL2x80iDim	A1 BAT	2	2	365	170	0.78-0.70	80

Note: *See pages 35 - 37 for connection diagrams and additional characteristics.*

** Dimming range 3-100 % for EL3x14iDim & EL4x14iDim*

Dimensions	1	2
Length 'a' (mm)	360	430
Width 'b' (mm)	30	30
Height 'c' (mm)	21	21
'd' (mm)	350	420

a

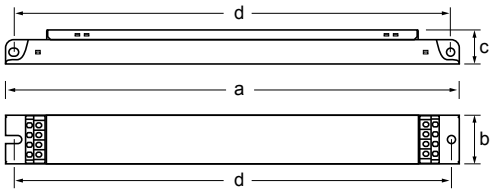

Delivery information

Ballast	Unit package		Transportation package		
	Minimum delivery amount	Plastic binding strip	EUR pallet 1200 x 800 (pcs.)	Pallet weight (kg)	Pallet height (cm)
EL1 x iDim	10	●	980	300	40
EL2 x iDim	10	●	840	325	43
EL3 x iDim	10	●	840	325	43
EL4 x iDim	10	●	840	325	43

Right to use German patent DE19757295 of Tridonic Atco

Digital DALI electronic ballasts for T5-eco fluorescent lamps

14-80 W 220-240 V, 50-60 Hz

- Digital DALI control
- Switch-Control
- Stand-by consumption 0.3 W
- Dimming range 1-100 % [1)]
- Only 21 mm high
- Microprocessor controlled
- Standard & Side mounting
- User friendly, quick release connectors

A1 BAT

Lamp type	Wattage	No. of lamps	Ballast	EEI	Dimensions	Connection (p.35)	Weight (g)	Circuit power [2)] (W)	Mains current [2)] (A)	Lamp power [2)] (W)
	14	1	EL1x14-35iDim	A1 BAT	1	1	250	14.7-16.2	0.08-0.07	12.2-13.7
	14	2	EL2x14-35iDim	A1 BAT	2	2	330	26.2-29.8	0.13-0.12	12.2-13.7
	14	3	EL3x14iDim [1)]	A1 BAT	2	3	310	40.5-44.7	0.20-0.18	12.1-13.4
	14	4	EL4x14iDim [1)]	A1 BAT	2	4	330	53-57	0.25-0.23	12.6-12.9
	21	1	EL1x14-35iDim	A1 BAT	1	1	250	21,0	0,10	18,5
	21	2	EL2x14-35iDim	A1 BAT	2	2	330	38,7	0,17	17,8
	24	1	EL1x24iDim	A1 BAT	1	1	250	24.5	0.10	21-21.8
	24	2	EL2x24iDim	A1 BAT	2	2	330	46.7	0.21	21-21.8
	28	1	EL1x14-35iDim	A1 BAT	1	1	250	30.2	0.13	26.6
	28	2	EL2x14-35iDim	A1 BAT	2	2	330	57	0.25	26.6
	35	1	EL1x14-35iDim	A1 BAT	1	1	250	35.3-35.7	0.16-0.15	32.5-34.3
	35	2	EL2x14-35iDim	A1 BAT	2	2	330	68.6-72.5	0.31-0.29	32.5-34.3
	49	1	EL1x49iDim [3)]	A1 BAT	1	1	250	53.3	0.23	50.1-53
	49	2	EL2x49iDim [3)]	A1 BAT	2	2	330	103-106.9	0.46-0.44	50.1-53
	54	1	EL1x54iDim [3)]	A1 BAT	1	1	250	56.9-59	0.27-0.25	52.9-55.6
	54	2	EL2x54iDim [3)]	A1 BAT	2	2	330	116.3-116.5	0.50-0.49	52.9-55.6
	80	1	EL1x80iDim	A1 BAT	1	1	250	79-82	0.36-0.34	71.2-76.2
	80	2	EL2x80iDim	A1 BAT	2	2	365	151.8-161	0.70-0.65	71.2-76.2

Note: *See pages 35 - 37 for connection diagrams and additional characteristics.*

1) Dimming range 3-100 % for EL3x14iDim & EL4x14iDim

2) Depending on difference in lamps from various manufacturers

3) Powercontrolled products, no energy saving when ecolamps are used. Lamps are running over powered.

Dimensions	1	2
Length 'a' (mm)	360	430
Width 'b' (mm)	30	30
Height 'c' (mm)	21	21
'd' (mm)	350	420

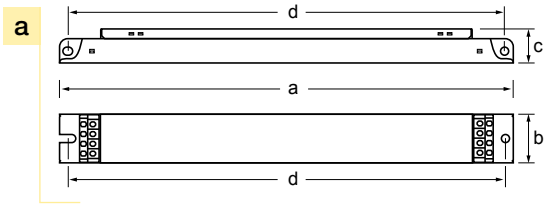

Delivery information

Ballast	Unit package		Transportation package		
	Minimum delivery amount	Plastic binding strip	EUR pallet 1200 x 800 (pcs.)	Pallet weight (kg)	Pallet height (cm)
EL1 x iDim	10	●	980	300	40
EL2 x iDim	10	●	840	325	43
EL3 x iDim	10	●	840	325	43
EL4 x iDim	10	●	840	325	43

Right to use German patent DE19757295 of Tridonic Atco

Digital DALI electronic ballasts for T8 fluorescent lamps

36 W 220-240 V, 50-60 Hz

- Digital DALI control
- Switch-Control
- Stand-by consumption 0.3 W
- Dimming range 1-100 %
- Only 21 mm high
- Microprocessor controlled
- Standard & Side mounting
- User friendly, quick release connectors

A1 BAT

3

Lamp type	Wattage	No. of lamps	Ballast	EEI	Dimensions	Connection (p.35)	Weight (g)	Circuit power (W)	Mains current (A)	Lamp power (W)
T8	36	1	EL1x36iDim	A1 BAT	1	1	250	35.5	0.17-0.15	32
	36	2	EL2x36iDim	A1 BAT	2	2	330	70.5	0.32-0.30	32

Note: *See pages 35 - 37 for connection diagrams and additional characteristics.*

Dimensions	1	2
Length 'a' (mm)	360	430
Width 'b' (mm)	30	30
Height 'c' (mm)	21	21
'd' (mm)	350	420

a

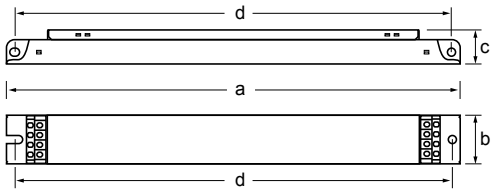

Delivery information

Ballast	Unit package		Transportation package		
	Minimum delivery amount	Plastic binding strip	EUR pallet 1200 x 800 (pcs.)	Pallet weight (kg)	Pallet height (cm)
EL1 x iDim	10	●	980	300	40
EL2 x iDim	10	●	840	325	43

Right to use German patent DE19757295 of Tridonic Atco

Digital DALI electronic ballasts for compact fluorescent lamps

24 - 80 W 220-240 V, 50-60 Hz

- Digital DALI control
- Switch-Control
- Stand-by consumption 0.3 W
- Dimming range 1-100 %
- Only 21 mm high
- Microprocessor controlled
- Standard & Side mounting
- User friendly, quick release connectors

A1 BAT

Lamp type	Wattage	No. of lamps	Ballast	EEI	Dimensions	Connection (p.35)	Weight (g)	Circuit power (W)	Mains current (A)	Lamp power (W)
TC-L	24	1	EL1x24iDim	A1 BAT	1	1	250	25.5	0.12-0.10	22.5
	24	2	EL2x24iDim	A1 BAT	2	2	330	50.5	0.23-0.21	22.5
	26	1	EL1x14-35iDim *	A1 BAT	1	1	250	29.3	0.13	26
	26	2	EL2x14-35iDim *	A1 BAT	2	2	330	56	0.25	26
	28	1	EL1x14-35iDim *	A1 BAT	1	1	250	29.3	0.13	26
	28	2	EL2x14-35iDim *	A1 BAT	2	2	330	56	0.25	26
	36	1	EL1x36iDim	A1 BAT	1	1	250	35.5	0.17-0.15	32
	36	2	EL2x36iDim	A1 BAT	2	2	330	70.5	0.32-0.30	32
	55	1	EL1x55iDim	A1 BAT	1	1	250	59.5	0.27-0.25	55
	55	2	EL2x55iDim	A1 BAT	2	2	330	119.5	0.55-0.50	55
	80	1	EL1x80iDim	A1 BAT	1	1	250	86	0.39-0.36	80
	80	2	EL2x80iDim	A1 BAT	2	2	365	170	0.78-0.70	80

Note: *See pages 35 - 37 for connection diagrams and additional characteristics.*

**) Dimming range 3-100 %*

Dimensions	1	2
Length 'a' (mm)	360	430
Width 'b' (mm)	30	30
Height 'c' (mm)	21	21
'd' (mm)	350	420

a

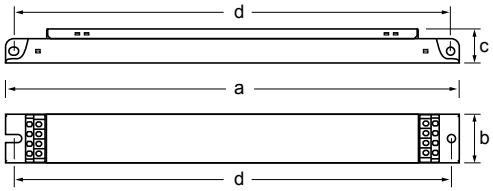

Delivery information

Ballast	Unit package		Transportation package		
	Minimum delivery amount	Plastic binding strip	EUR pallet 1200 x 800 (pcs.)	Pallet weight (kg)	Pallet height (cm)
EL1 x iDim	10	●	980	300	40
EL2 x iDim	10	●	840	325	43

Right to use German patent DE19757295 of Tridonic Atco

Digital DALI electronic ballasts for compact fluorescent lamps

18 - 42 W 220-240 V, 50-60 Hz

- Digital DALI control
- Switch-Control
- Stand-by consumption 0.3 W
- Dimming range 3-100 %
- Multilamp operation
- Single and twin lamp operation

A1 BAT

Lamp type	Wattage	No. of lamps	Ballast	EEI	Dimensions	Connection (p.35)	Weight (g)	Circuit power (W)	Mains current (A)	Lamp power (W)
TC-L/ TC-F	18	1	EL1/2x18/24iDim-c	A1 BAT	123x79x28	5	155	18	0.09	16
	18	2	EL1/2x18/24iDim-c	A1 BAT	123x79x28	6	155	35.5	0.16	16
	24	1	EL1/2x18/24iDim-c	A1 BAT	123x79x28	5	155	26	0.12	22
	24	2	EL1/2x18/24iDim-c	A1 BAT	123x79x28	6	155	50	0.23	22
T5c	22	1	EL1/2x18/24iDim-c	A1 BAT	123x79x28	5	155	26	0.12	22
	40	1	EL1/2x18/24iDim-c	A1 BAT	123x79x28	5	155	44.5	0.20	40
TC-DE/ TC-TE	18	1	EL1/2x18iDim-c	A1 BAT	123x79x28	5	155	20	0.09	16.5
	18	2	EL1/2x18iDim-c	A1 BAT	123x79x28	6	155	38	0.17	16.5
	26	1	EL1/2x26-42iDim-c	A1 BAT	123x79x28	5	155	28	0.13	23
	26	2	EL1/2x26-42iDim-c	A1 BAT	123x79x28	6	155	56	0.25	23.5
	26	2	EL2x26-42iDim-c	A1 BAT	123x79x28	7	176	56	0.25	25
	32	1	EL1/2x26-42iDim-c	A1 BAT	123x79x28	5	155	35	0.16	31
	32	2	EL2x26-42iDim-c	A1 BAT	123x79x28	7	176	70.5	0.32	32
	42	1	EL1/2x26-42iDim-c	A1 BAT	123x79x28	5	155	46	0.2	41.5
	42	2	EL2x26-42iDim-c	A1 BAT	123x79x28	7	176	93	0.42	43
	57	1	EL1/2x26-42iDim-c [1)2)]	A1 BAT	123x79x28	5	155	61	0.27	56

Note: *See pages 35 - 37 for connection diagrams and additional characteristics.*

1) Tested and recommended by Helvar, not ENEC approved

2) U_{IN} > 220 V, T_a > 18 °C

Dimensions	
Length 'a' (mm)	123.0
Width 'b' (mm)	79.0
Height 'c' (mm)	28.0
'd' (mm)	100.5
'e' (mm)	65.0
'f' (mm)	111.0
'g' (mm)	25.5

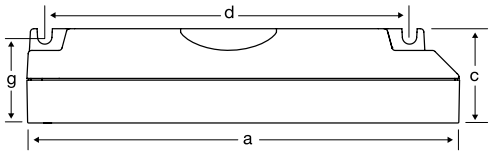

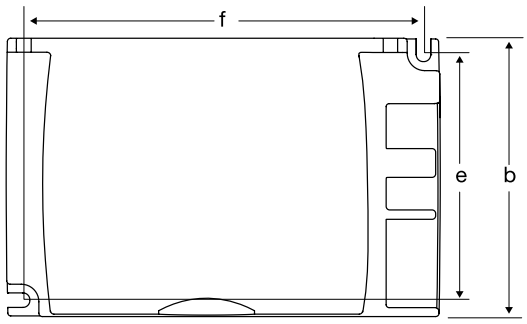

Delivery information

Ballast	Unit package		Transportation package		
	Minimum delivery amount	Carton Box	Pallet 820 x 1280 (pcs.)	Pallet weight (kg)	Pallet height (cm)
EL-iDim-c	10	40	800	148	48

Right to use German patent DE19757295 of Tridonic Atco

Connection diagrams

EL-iDim

NOTE: *All wiring to the connectors marked with a red dot (hot wires) should be as short as possible.*

1

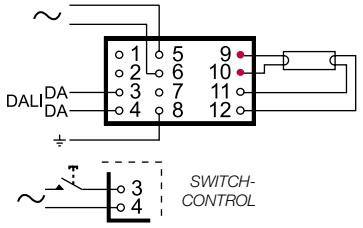

2

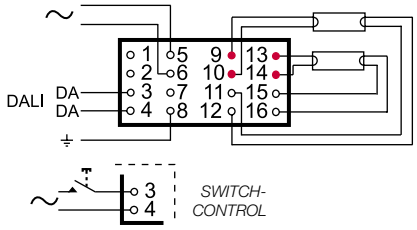

3

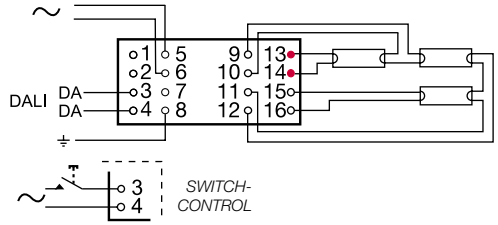

4

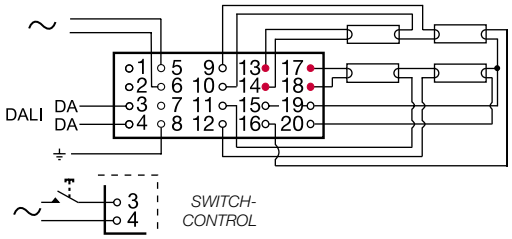

5

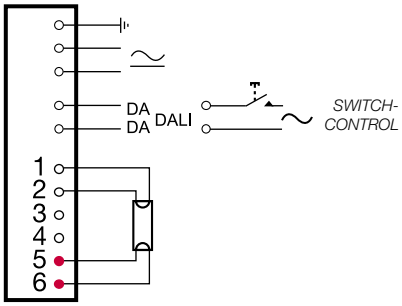

6

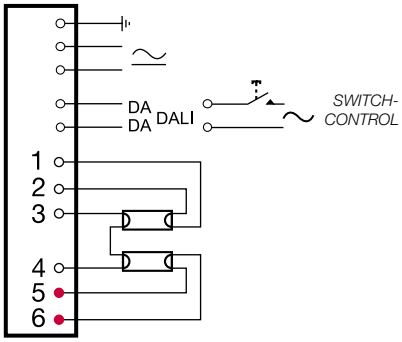

7

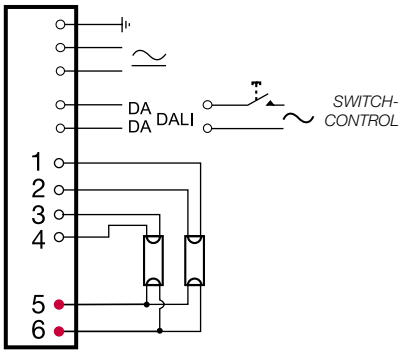

1	EL1x ...iDim
2	EL2x ...iDim
3	EL3x ...iDim
4	EL4x ...iDim
5	EL1/2x...iDim-c
6	EL1/2x...iDim-c
7	EL2x...iDim-c

Right to use German patent DE19757295 of Tridonic Atco

Characteristics

	EL-iDim	EL-iDim-c
Max.temperature at t_C point	75 °C [3]	75 °C
Ambient temperature range	+10…+50 °C [1) 5) 6)]	+10…+50 °C [5)]
Storage temperature range	-40…+80 °C	-40…+80 °C
Maximum relative humidity	no condensation	no condensation
Number of starts per lamp	> 50 000	> 50 000
AC Range	198-264 VAC	198-264 VAC
DC range (starting voltage >198VDC)	176-280 VDC	176-280 VDC
Over voltage duration	320 VAC, 1h	320 VAC, 1h
EBLF (Emergency Ballast Lumen Factor)	N/A	> 0.5 [7)]
BLF (Ballast Lumen Factor), steady state	~1	~1
Programmable light output for DC operation	yes	yes
Power factor (at maximum), typical	0.96	0.96
Earth leakage current	< 0.4 mA	< 0.4 mA
Maximum working voltage (Uout)	400 V	400 V
Lifetime (90 % survival)	50 000 h, at tc	50 000 h, at tc
Max length of ballast to lamp wiring	1.5 m / 2 m (hot / cold) [2)4)]	1 m / 1 m (hot / cold) [4)]
Ignition time, typical	1.0 s	1.0 s [8)]
Type of starting	Preheat (warm start)	Preheat (warm start)

1) To ensure stable operation of TC-L lamps in ambient temperatures below 18 °C it is not recommended to dim the light level below 3 %

2) For TC-L lamps 1 m / 2 m (hot/cold lamp wires)

3) For EL 3x14iDim, t_C = 65 °C

4) Minimise lamp wire length variations in order to avoid imbalance in light output.

5) When using EL3x14iDim, EL4x14iDim and EL1/2x18/24iDim-c ballasts in ambient temperatures below 15 °C it is not recommended to dim the light level below 10 % to ensure stable lamp operation.

6) For EL2x80iDim, it is not recommended to dim the light below 5 % in temperatures below 15 °C

7) EL2x26-42iDim-c; EBLF > 0,3

8) EL1/2x18/24iDim-c ignition time = 1.4 s

Standards

	EL-iDim	EL-iDim-c
General and safety requirements EN61347-2-3	●	●
Additional safety requirements for AC/DC supplied ballasts acc. to EN61347-2-3 Annex J	●	●
Performance requirements EN60929	●	●
Preheat starting	●	●
Lamp life acc. to EN60081 / EN60901 *)	●	●
Mains current harmonics, acc. to EN61000-3-2	●	●
Radio Frequency Interference, acc. to EN55015	●	●
Immunity standard, acc.to EN61547	●	●
Vibration test EN60068-2-64 test Fh	●	●
Bump test EN60068-2-29 test Eb	●	●
Thermal protection class EN61347, C5e	●	●
Tested and proven compatible with DALI V1 (IEC62386, 2009)	●	●

** EN 60081 for T5 & T8 fluorescent lamps, EN 60901 for compact fluorescent lamps*

Switch-Control Information, EL-iDim / EL-iDim-c ballasts

Switch-Control provides ON/OFF switching and UP/DOWN dimming functionality from one or more simple switches.
Switch-Control and DALI can not be connected to the iDim ballast at the same time.

Suitable switch:
- Automatic return type
- Mains rated

Connection:
- EL-iDim ballasts: To the DALI input
- Wire length: 25 m maximum. diagram A
  25 - 200 m, use a capacitor (1 µF, 275 V) diagram B
- Ballasts per switch: 50 (observe above)
- Ensure all ballasts and associated switches are connected to the same mains phase

Operation:
- Switch off: Short push of the switch (< 0.4 second)
- Switch on: Short push of the switch (< 0.4 second)
- EL-iDim ballasts will switch on to the last set level
- Dimming: Long push of the switch (> 0.5 second)
  - If lamps are off, the ballast dims up from minimum
  - If lamps are on, the ballast dims in the opposite direction to previously
  - The first dimming direction is dimming down

Correction of out of sequence operation:
- Switch the mains supply off and on, or…
- Long push (until all lamps are on), then a short push (all lamps off), then switch on

Compatibility:
Some ballasts manufacturers have functionality similar to Helvar Switch-Control. These methods are NOT COMPATIBLE with each other.

Connection
- To the DALI input

A) 0-25 m

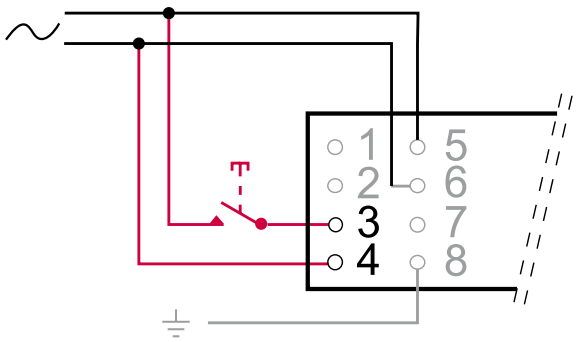

B) 25-200 m

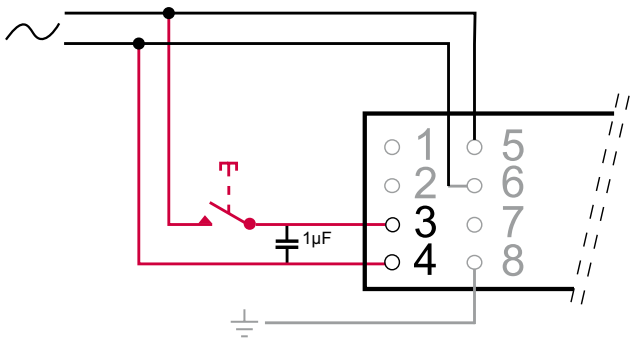

Magnetic ballasts for fluorescent lamps

HELVAR has over 6 decades of experience in designing, manufacturing and delivering ballasts for fluorescent lamps. The know-how has turned into successful partnerships with luminaire manufacturers and benefits our customers world wide.

High quality is the key element in HELVAR ballasts. Meeting international standards and local regulations are the natural starting points in our: approach to quality – but it does not end there! 'Whether noise levels, service life, magnetic stray fields or terminal design are concerned, high technical standards are our main objectives in product development. Fully automatic high-volume production and 100 % quality control are ways in which we achieve the top quality in our products.

Offering

HELVAR's fluorescent ballast range offers products to all relevant energy efficiency classes. This gives flexibility to luminaire designers and end users to make the right choices for each application and market sector. The flexibility in HELVAR's production philosophy and product design, as well as the know-how to benefit from different materials, gives the right means to react to the latest demands in energy efficiency classification.

HELVAR's ballast range covers linear fluorescent lamps up to 100 W with voltages between 220-240 VAC. Ballasts for compact lamps, as well as types for circular or U-shaped ones for instance, are also included in our range. Furthermore, for certain lamps, ballasts with different operating temperatures are available. This gives the luminaire manufacturers a possibility to optimise their fitting construction. HELVAR's product range also includes different voltage and frequency alternatives.

Magnetic ballasts for fluorescent T8 lamps

tw 130

15 - 36 W 230 V, 50 Hz

- Meets EN 61347-2-8 & EN60921 requirements
- Low harmonics
- Low power losses
- Correctly trimmed lamp current guaranteed for entire lifetime
- 100 % quality controlled
- Double wire terminals without screws
- Small size
- Long lifetime

Lamp				Ballast							Compensation	
Lamp type	Lamp wattage (W)	No. of lamps	Lamp current (A)	Ballast type	EEI	Dimen-sions (p.44)	Connec-tion (p.44)	Net weight (kg)	Inductive λ	Temp. rise Δt (°C)	Parallel Ck 230/250V ±10 % (µF)	Mains current (A)
	15	1	0.31	L 15 TL3	B1	3	1,2	0.76	0.31	40/70	4.0	0.12
	15	1	0.31	L 15 A-P	B2	1	1,2	0.55	0.31	50/95	4.0	0.12
	15	1	0.31	L 15 A	B2	1	1,2	0.60	0.35	55/80	4.0	0.12
	15	2	0.31	L 30 TL2	B1	3	4	0.82	0.45	30/70	4.5	0.21
	15	2	0.31	L 30 A	B2	1	4	0.61	0.50	55/110	4.5	0.20
	15	2	0.31	L 30 A-P	B2	1	4	0.56	0.50	50/125	4.5	0.21
	16	1	0.20	L 16 DL	B1	6	1,2	0.32	0.43	60/150	2.0	0.11
	16	1	0.20	L 16 D	B2	6	1,2	0.32	0.46	65/150	2.0	0.11
	18	1	0.37	L 18 TL2	B1	3	1,2	0.83	0.30	35/60	4.5	0.14
	18	1	0.37	L 18 TL3	B1	3	1,2	0.76	0.30	40/70	4.5	0.14
	18	1	0.37	L 18 TL4	B2	3	1,2	0.65	0.30	45/80	4.5	0.14
	18	1	0.37	L 18 A-T	B2	1	1,2	0.57	0.32	50/95	4.5	0.14
	18	1	0.37	L 18 A-K	B2	1	1,2	0.61	0.32	50/95	4.5	0.14
	18	1	0.37	L 20 A-P [1)]	C	1	1,2	0.56	0.32	55/95	4.5	0.14
	18	1	0.37	L 18 A-L [1)]	C	1	1,2	0.51	0.35	65/90	4.5	0.14
	18	2	0.37	L 36 TL2	B1	3	4	0.83	0.45	35/90	4.5	0.23
	18	2	0.37	L 36 TL3	B1	3	4	0.78	0.45	40/90	4.5	0.23
	18	2	0.37	L 36 TL4	B2	3	4	0.65	0.45	45/110	4.5	0.23
	18	2	0.37	L 36 A-K	B2	1	4	0.61	0.50	50/145	4.5	0.23
	18	2	0.37	L 36 A-TK	B2	1	4	0.57	0.50	50/140	4.5	0.23
	18	2	0.37	L 36 A-T	B2	1	4	0.57	0.50	50/155	4.5	0.23
	18	2	0.37	L 2x18 A-T	B1	1	4	0.56	0.55	55/155	4.5	0.23
	18	2	0.37	L 40 A-C [1)]	C	1	4	0.53	0.53	55/160	4.5	0.23
	18	2	0.37	L 2x18 A-L	B2	1	4	0.51	0.55	65 / -	4.5	0.23
	18	2	0.37	L 40 A-L [1)]	D	1	4	0.51	0.55	65/160	4.5	0.23
	25	1	0.29	L 15 TL3	B1	3	1,2	0.76	0.46	35/70	3.5	0.15
	25	1	0.29	L 15 A	B2	1	1,2	0.60	0.50	40/80	3.5	0.15
	25	1	0.29	L 15 A-P	B2	1	1,2	0.55	0.46	40/95	3.5	0.15
	30	1	0.365	L 30 TL2	B1	3	1,2	0.82	0.45	30/70	4.5	0.18
	30	1	0.365	L 30 A	B2	1	1,2	0.61	0.45	55/110	4.5	0.19
	30	1	0.365	L 30 A-P	B2	1	1,2	0.56	0.45	50/125	4.5	0.18
	36	1	0.43	L 36 TL2	B1	3	1,2	0.83	0.43	35/90	4.5	0.23
	36	1	0.43	L 36 TL3	B1	3	1,2	0.78	0.43	40/90	4.5	0.23
	36	1	0.43	L 36 TL4	B2	3	1,2	0.65	0.43	45/110	4.5	0.23
	36	1	0.43	L 36 A-K	B2	1	1,2	0.61	0.45	50/145	4.5	0.23
	36	1	0.43	L 36 A-TK	B2	1	1,2	0.57	0.45	50/140	4.5	0.23
	36	1	0.43	L 36 A-T	B2	1	1,2	0.57	0.45	50/155	4.5	0.23
	36	1	0.37	L 40 A-C [1)]	C	1	1,2	0.53	0.50	55/160	4.5	0.23
	36	1	0.43	L 40 A-L [1)]	D	1	1,2	0.51	0.50	65/160	4.5	0.23

Note: *See page 44 for connection diagrams, dimensions and delivery information.*

1) Not available for European Union market

2) Lamps excluded from the CELMA EEI directive do not have an EEI classification

Magnetic ballasts for fluorescent T8 lamps

tw 130

38 - 58 W 230 V, 50 Hz

- Meets EN 61347-2-8 & EN60921 requirements
- Low harmonics
- Low power losses
- Correctly trimmed lamp current guaranteed for entire lifetime
- 100 % quality controlled
- Double wire terminals without screws
- Small size
- Long lifetime

Lamp				Ballast							Compensation	
Lamp type	Lamp wattage (W)	No. of lamps	Lamp current (A)	Ballast type	EEI	Dimen-sions (p.44)	Connec-tion (p.44)	Net weight (kg)	Inductive λ	Temp. rise Δt (°C)	Parallel Ck 230/250V ±10 % (µF)	Mains current (A)
	38	1	0.43	L 36 TL2	B1	3	1,2	0.83	0.45	35/90	4.5	0.24
	38	1	0.43	L 36 TL3	B1	3	1,2	0.78	0.45	40/90	4.5	0.24
	38	1	0.43	L 36 TL4	B2	3	1,2	0.65	0.45	45/110	4.5	0.24
	38	1	0.43	L 36 A-TK	B2	1	1,2	0.57	0.50	50/140	4.5	0.24
	38	1	0.43	L 36 A-K	B2	1	1,2	0.61	0.48	50/145	4.5	0.24
	38	1	0.43	L 36 A-T	B2	1	1,2	0.57	0.45	50/155	4.5	0.24
	38	1	0.37	L 40 A-C [1]	C	1	1,2	0.53	0.50	55/160	4.5	0.24
	38	1	0.43	L 40 A-L [1]	D	1	1,2	0.51	0.48	65/160	4.5	0.24
	58	1	0.67	L 58 TL2	B1	4	1,2	1.36	0.45	35/95	7.0	0.34
	58	1	0.67	L 58 TL3	B1	4	1,2	1.30	0.45	40/95	7.0	0.34
	58	1	0.67	L 58 TL4-220mm	B2	4	1,2	1.09	0.45	40/110	7.0	0.34
	58	1	0.67	L 58 TL4	B2	5	1,2	1.06	0.45	40/110	7.0	0.34
	58	1	0.67	L 58 A-S	B2	2	1,2	1.00	0.48	45/130	7.0	0.34
	58	1	0.67	L 58 A-K	B2	2	1,2	0.92	0.48	45/135	7.0	0.34
	58	1	0.67	L 58 A-TK	B2	2	1,2	0.88	0.48	50/140	7.0	0.34
	58	1	0.67	L 58 A-T	B2	2	1,2	0.88	0.48	50/145	7.0	0.34
	58	1	0.67	L 65 A-P [1]	C	2	1,2	0.87	0.50	55/145	7.0	0.34

Note: *See page 44 for connection diagrams, dimensions and delivery information.*

1) Not available for European Union market

Magnetic ballasts for fluorescent T8 lamps

tw 130

- Meets EN 61347-2-8 & EN60921 requirements
- Low harmonics
- Low power losses
- Correctly trimmed lamp current guaranteed for entire lifetime
- 100 % quality controlled
- Double wire terminals without screws
- Small size
- Long lifetime

Lamp				Ballast							Compensation	
Lamp type	Lamp wattage (W)	No. of lamps	Lamp current (A)	Ballast type	EEI	Dimen-sions (p.44)	Connec-tion (p.44)	Net weight (kg)	Inductive λ	Temp. rise Δt (°C)	Parallel Ck 230/250V ±10 % (µF)	Mains current (A)
	15	1	0.31	L 15 A	B2	1	1,2	0.60	0.35	55/80	4.0	0.11
	15	2	0.31	L 30 A-P	B2	1	4	0.56	0.45	55/125	4.0	0.17
	15	2	0.31	L 30 A	B2	1	4	0.61	0.45	55/125	4.0	0.17
	16	1	0.2	L 16 D	B2	6	2	0.32	0.45	65/160	2.0	0.10
	18	1	0.37	L 18 TL4	B2	3	1,2	0.65	0.29	45/80	4.0	0.14
	18	1	0.37	L 18 A-K	B2	1	1,2	0.61	0.32	55/90	4.0	0.13
	18	1	0.37	L 20 A-P [3]	C	1	1,2	0.56	0.35	60/90	4.0	0.13
	18	1	0.37	L 18 A-L [3]	C	1	1,2	0.51	0.33	65/100	4.0	0.13
	18	2	0.37	L 36 TL2	B1	3	4	0.83	0.44	35/95	4.0	0.22
	18	2	0.37	L 36 A-K	B2	1	4	0.61	0.50	55/155	4.0	0.22
	18	2	0.37	L 36 A-T	B2	1	4	0.57	0.52	55/155	4.0	0.22
	18	2	0.37	L 2x18 A-L	B2	1	4	0.51	0.52	65/ -	4.0	0.22
	18	2	0.37	L 40 A-P [3]	C	1	4	0.56	0.53	70/160	4.0	0.22
	25	1	0.29	L 15 A	B2	1	1,2	0.60	0.45	55/90	3.0	0.14
	30	1	0.365	L 30 A	B2	1	1,2	0.61	0.45	55/125	4.0	0.17
	30	1	0.365	L 30 A-P	B2	1	1,2	0.56	0.45	55/125	4.0	0.17
	36	1	0.43	L 36 TL2	B1	3	1,2	0.83	0.42	35/95	4.5	0.22
	36	1	0.43	L 36 A-K	B2	1	1,2	0.61	0.45	55/155	4.5	0.22
	36	1	0.43	L 36 A-T	B2	1	1,2	0.57	0.47	55/155	4.5	0.22
	36	1	0.43	L 40 A-P [3]	C	1	1,2	0.56	0.50	70/160	4.5	0.22
	38	1	0.43	L 36 TL2	B1	3	1,2	0.83	0.44	35/95	4.0	0.22
	38	1	0.43	L 36 A-K	B2	1	1,2	0.61	0.45	55/155	4.0	0.23
	38	1	0.43	L 36 A-T	B2	1	1,2	0.57	0.49	55/155	4.0	0.23
	38	1	0.43	L 40 A-P [3]	C	1	1,2	0.56	0.52	70/160	4.0	0.23
	58	1	0.67	L 58 TL2	B1	4	1,2	1.36	0.42	35/95	7.0	0.32
	58	1	0.67	L 58 A-K	B2	2	1,2	0.92	0.48	50/145	7.0	0.32
	58	1	0.67	L 58 A-T	B2	2	1,2	0.88	0.48	55/145	7.0	0.32
	58	1	0.67	L 65 A-P [3]	C	2	1,2	0.88	0.50	60/145	7.0	0.32
	70	1	0.70	L 75 A-S	B2	2	1,2	1.00	0.51	60	6.0	0.41
	70	1	0.70	L 70 TL4	B2	5	1,2	1.09	0.50	45	6.0	0.40
	100	1	0.96	L100 TE61	- [4]	4	1,2	1.28	0.52	60/145	10.0	0.55
	125	1	0.94	L100 TE61	- [4]	4	3	1.32	0.62c[2]	60/145	-[1]	-

Note: *See page 44 for connection diagrams, dimensions and delivery information.*

1) Essential: Series capacitor 7.2 µF ±4 % 440 V

2) Capacitive

3) Not available for European Union market

4) Lamps excluded from the CELMA EEI directive do not have an EEI classification

Magnetic ballasts for fluorescent T8 lamps

tw 130

- Meets EN 61347-2-8 & EN60921 requirements
- Low harmonics
- Low power losses
- Correctly trimmed lamp current guaranteed for entire lifetime
- 100 % quality controlled
- Double wire terminals without screws
- Small size
- Long lifetime

Lamp				Ballast							Compensation	
Lamp type	Lamp wattage (W)	No. of lamps	Lamp current (A)	Ballast type	EEI	Dimen-sions (p.44)	Connec-tion (p.44)	Net weight (kg)	Inductive λ	Temp. rise Δt (°C)	Parallel Ck 230/250V ±10 % (µF)	Mains current (A)
	18	1	0.37	L 18 A-L [1]	C	1	1,2	0.51	0.35	65/90	4.5	0.16
	18	2	0.37	L 40 A-C [1]	C	1	4	0.52	0.53	55/150	4.5	0.24
	18	2	0.37	L 40 A-L [1]	C	1	4	0.51	0.55	65/160	4.5	0.24
	25	1	0.29	L 15 A-P	B2	1	1,2	0.55	0.50	50/85	3.5	0.15
	30	1	0.365	L 30 A-P	B2	1	1,2	0.56	0.50	45/110	4.5	0.21
	36	1	0.43	L 40 A-C [1]	C	1	1,2	0,52	0.50	55/150	4.5	0.24
	36	1	0.43	L 40 A-L [1]	D	1	1,2	0.51	0.50	65/160	4.5	0.24
	38	1	0.43	L 40 A-L [1]	D	1	1,2	0.51	0.49	65/160	4.5	0.24
	58	1	0.67	L 65 A-P [1]	C	2	1,2	0.88	0.50	55/145	7.0	0.35

Note: *See page 44 for connection diagrams, dimensions and delivery information*

1) Not available for European Union market

Connection diagrams

L-A... / L-T... / L-D

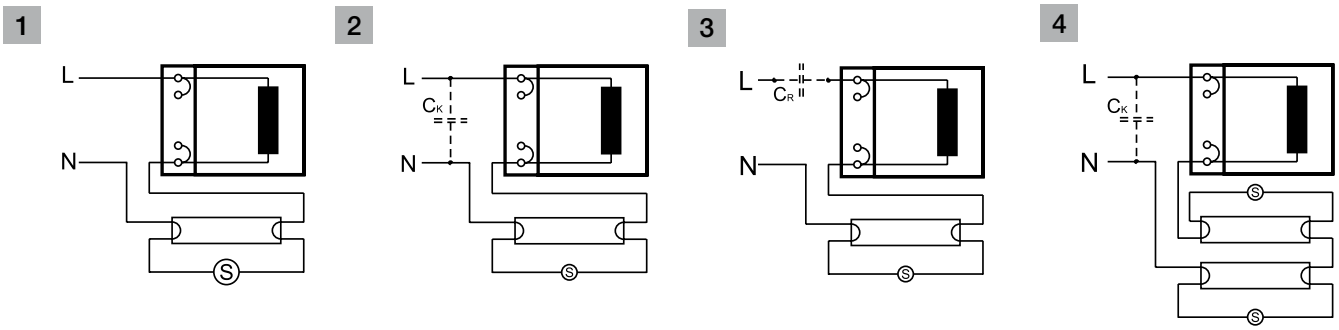

4

Dimensions

No.	1	2	3	4	5	6
Drawing	A	A	B	B	B	C
Length 'a' (mm)	150	190	150	230	190	85
Width 'b' (mm)	42	42	42	42	42	41.5
Height 'c' (mm)	28	28	28.8	28.8	28.8	28
'd' (mm)	140	180	140	220	180	73

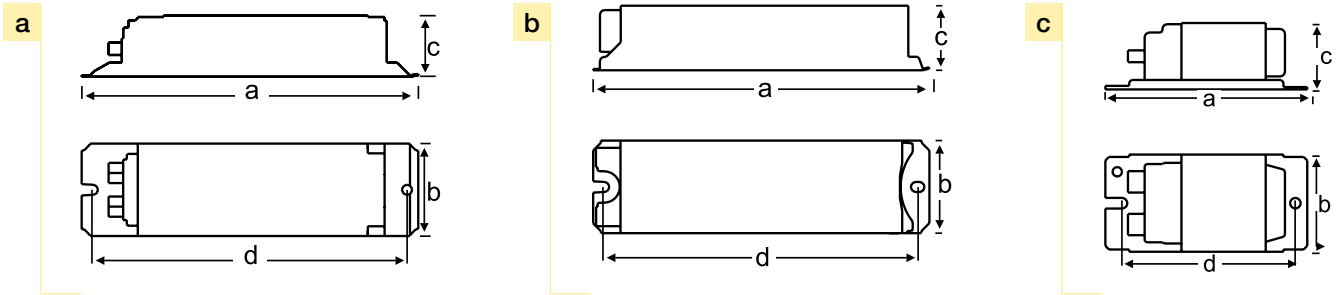

Delivery information

Delivery information

Ballast	Unit package			Transportation package					
					One-way pallet				
	Minimum delivery amount	Plastic binding strip	Carton box	Eur pallet 1200 x 820 (pcs.)	1080 x 770 (pcs.)	730 x 650 (pcs.)	1120 x 730 (pcs.)	Pallet weight (kg)	Pallet height (cm)
L 18 - 36TL	10	X		1250	1400	840	-	720-1190	53
L...TS / TLD, L 21TL	10	X		2100	1500	-	-	1010-1159	63
L 42 - 100 T/TL/TE	10	X		750	750	-	-	1080	45
L 15 - 40 A...	10	X		2000 1000	2000	960	-	A/AK 602-1256 AP/AT 545-1135	68 68
L 58. - 85 A...	10	X		1200	1200	720	-	720-1215	58
L...D / DL	30		X	1800	-	-	1800	612	40

Magnetic ballasts for compact fluorescent lamps

tw 130

18 - 36 W 230 V, 50 Hz

- Meets EN 61347-2-8 & EN 60921requirements
- Low power losses
- 100 % quality controlled
- Double wire terminals without screws
- Low harmonics
- Very low magnetic field
- Small size
- Long lifetime

Lamp				Ballast							Compensation	
Lamp type	Lamp wattage (W)	No. of lamps	Lamp current (A)	Ballast type	EEI	Dimen-sions (p.49)	Connec-tion (p.49)	Net weight (kg)	Inductive λ	Temp. rise Δt (°C)	Parallel Ck 230/250V ±10 % (µF)	Mains current (A)
	18	1	0.37	L18 TL2	B1	2	3	0.83	0.30	35/60	4.5	0.15
	18	1	0.37	L18 TL3	B1	2	3	0.78	0.30	40/70	4.5	0.15
	18	1	0.37	L18 TL4	B2	2	3	0.65	0.30	45/80	4.5	0.15
	18	1	0.37	L18 A-K	B2	1	3	0.61	0.32	55/95	4.5	0.15
	18	1	0.37	L18 A-T	B2	1	3	0.57	0.32	50/95	4.5	0.15
	18	1	0.37	L20 A-P [1)]	C	1	3	0.56	0.32	55/95	4.5	0.15
	18	1	0.37	L18 A-L [1)]	C	1	3	0.51	0.35	65/90	4.5	0.15
	18	2	0.37	L36 TL2	B1	2	4	0.83	0.45	35/90	4.5	0.23
	18	2	0.37	L36 TL3	B1	2	4	0.78	0.45	40/90	4.5	0.23
	18	2	0.37	L36 TL4	B2	2	4	0.65	0.45	45/110	4.5	0.23
	18	2	0.37	L36 A-K	B2	1	4	0.61	0.50	50/145	4.5	0.23
	18	2	0.37	L36 A-TK	B2	1	4	0.57	0.50	50/140	4.5	0.23
	18	2	0.37	L36 A-T	B2	1	4	0.57	0.50	50/155	4.5	0.23
	18	2	0.37	L40 A-C [1)]	C	1	4	0.53	0.53	55/160	4.5	0.23
	18	2	0.37	L40 A-L [1)]	D	1	4	0.51	0.55	65/160	4.5	0.23
	24	1	0.345	L18 TL2	B1	2	3	0.83	0.38	35/60	4.0	0.16
	24	1	0.345	L18 TL3	B1	2	3	0.76	0.38	40/70	4.0	0.16
	24	1	0.345	L18 TL4	B1	2	3	0.65	0.41	45/80	4.0	0.16
	24	1	0.345	L18 A-K	B2	1	3	0.61	0.40	55/95	4.0	0.16
	24	1	0.345	L18 A-T	B2	1	3	0.57	0.38	50/95	4.0	0.16
	24	1	0.345	L20 A-P	B2	1	3	0.56	0.42	50/95	4.0	0.16
	24	1	0.345	L26 TS5-100mm	B2	3	3	0.50	0.40	55/100	4.0	0.16
	24	1	0.345	L18 A-L [1)]	C	1	3	0.51	0.42	65/90	4.0	0.16
	36	1	0.43	L36 TL2	B1	2	3	0.83	0.43	35/90	4.5	0.23
	36	1	0.43	L36 TL3	B1	2	3	0.78	0.43	40/90	4.5	0.23
	36	1	0.43	L36 TL4	B2	2	3	0.65	0.43	45/110	4.5	0.23
	36	1	0.43	L36 A-K	B2	1	3	0.61	0.45	50/145	4.5	0.23
	36	1	0.43	L36 A-TK	B2	1	3	0.57	0.45	50/140	4.5	0.23
	36	1	0.43	L36 A-T	B2	1	3	0.57	0.45	50/155	4.5	0.23
	36	1	0.37	L40 A-C [1)]	C	1	3	0.53	0.50	55/160	4.5	0.23
	36	1	0.43	L40 A-L [1)]	D	1	3	0.51	0.50	65/160	4.5	0.23

Note: *See page 49 for connection diagrams, dimensions and delivery information.*

1) Not available for European Union market

Magnetic ballasts for compact fluorescent lamps

tw 130

10 - 38 W 230 V, 50 Hz

- Meets EN 61347-2-8 & EN 60921requirements
- Low power losses
- 100 % quality controlled
- Double wire terminals without screws
- Low harmonics
- Very low magnetic field
- Small size
- Long lifetime

Lamp				Ballast							Compensation	
Lamp type	Lamp wattage (W)	No. of lamps	Lamp current (A)	Ballast type	EEI	Dimen-sions (p.49)	Connec-tion (p.49)	Net weight (kg)	Inductive λ	Temp. rise Δt (°C)	Parallel Ck 230/250V ±10 % (µF)	Mains current (A)
TC-DD[2]	16	1	0.20	L16 DL	B1	4	8	0.32	0.43	60/150	2.0	0.11
	16	1	0.20	L16 D	B2	4	8	0.32	0.46	65/150	2.0	0.11
	28	1	0.325	L18 TL2	B1	2	8	0.83	0.48	35/60	3.5	0.20
	28	1	0.325	L18 TL3	B1	2	8	0.78	0.48	40/70	3.5	0.20
	28	1	0.325	L18 TL4	B2	2	8	0.65	0.44	45/80	3.5	0.20
	28	1	0.325	L18 A-T	B2	1	8	0.57	0.50	50/95	3.5	0.20
	28	1	0.325	L20 A-P [1]	C	1	8	0.56	0.50	55/95	3.5	0.20
	28	1	0.325	L18 A-L [1]	C	1	8	0.51	0.50	65/90	3.5	0.20
	38	1	0.43	L 36 TL2	B1	2	8	0.83	0.45	35/90	4.5	0.24
	38	1	0.43	L 36 TL3	B1	2	8	0.78	0.45	40/90	4.5	0.24
	38	1	0.43	L 36 TL4	B2	2	8	0.65	0.45	45/110	4.5	0.24
	38	1	0.43	L36 A-K	B2	1	8	0.61	0.48	50/145	4.5	0.24
	38	1	0.43	L36 A-TK	B2	1	8	0.57	0.45	50/140	4.5	0.24
	38	1	0.43	L36 A-T	B2	1	8	0.57	0.45	50/155	4.5	0.24
	38	1	0.43	L40 A-C [1]	C	1	8	0.53	0.48	55/160	4.5	0.24
	38	1	0.43	L40 A-L [1]	D	1	8	0.51	0.48	65/160	4.5	0.24
T-R [3]	22	1	0.40	L30 TL2	B1	2	7	0.82	0.30	40/70	5.0	0.17
	22	1	0.40	L30 A [1]	C	1	7	0.61	0.35	60/110	5.0	0.17
	32	1	0.45	L32 TB2	B2	2	7	0.62	0.40	55/120	5.0	0.21
TC-D	10	1	0.19	L13 DL	B2	4	5	0.32	0.35	50/95	2.0	0.08
	10	1	0.19	L13 D	B2	4	5	0.32	0.35	65/120	2.0	0.08
	13	1	0.175	L13 DL	B1	4	5	0.32	0.45	50/95	2.0	0.08
	13	1	0.175	L13 D	B1	4	5	0.32	0.45	65/120	2.0	0.08
	18	1	0.22	L18 TLD-100mm	B1	3	5	0.50	0.45	30/60	2.0	0.12
	18	1	0.22	L18 DL	B1	4	5	0.32	0.45	60/150	2.0	0.12
	18	1	0.22	L18 D	B1	4	5	0.32	0.50	65/155	2.0	0.13
	26	1	0.325	L18 TL2	B1	2	5	0.83	0.43	35/60	3.5	0.18
	26	1	0.325	L18 TL3	B1	2	5	0.78	0.43	40/70	3.5	0.18
	26	1	0.325	L18 TL4	B2	2	5	0.65	0.45	45/80	3.5	0.18
	26	1	0.325	L20 A-P	B2	1	5	0.56	0.45	50/95	3.5	0.18
	26	1	0.325	L18 A-T	B2	1	8	0.57	0.45	50/95	3.5	0.18
	26	1	0.325	L18 A-K	B2	1	5	0.61	0.45	55/95	3.5	0.18
	26	1	0.325	L26 TS5-100mm	B2	3	5	0.50	0.45	50/100	3.5	0.18
	26	1	0.325	L26 S-100mm	B2	5	5	0.44	0.47	60/140	3.5	0.18
	26	1	0.325	L18 A-L [1]	C	1	5	0.51	0.45	75/90	3.5	0.18

Note: *See page 49 for connection diagrams, dimensions and delivery information.*

1) Not available for European Union market

2) Also GR 10q; external starter required

3) Cap G10q

Magnetic ballasts for compact fluorescent lamps

tw 130

4 - 13 W 230 V, 50 Hz

- Meets EN 61347-2-8 & EN 60921requirements
- Low power losses
- 100 % quality controlled
- Double wire terminals without screws
- Low harmonics
- Very low magnetic field
- Small size
- Long lifetime

Lamp				Ballast							Compensation	
Lamp type	Lamp wattage (W)	No. of lamps	Lamp current (A)	Ballast type	EEI	Dimen-sions (p.49)	Connec-tion (p.49)	Net weight (kg)	Inductive λ	Temp. rise Δt (°C)	Parallel Ck 230/250V ±10 % (µF)	Mains current (A)
T5	4	1	0.17	L8 D	B2	4	1	0.32	0.25	65/90	2.0	0.06
	4	2	0.17	L8 D	B2	4	2	0.32	0.35	65/90	2.0	0.06
	6	1	0.16	L8 D	B2	4	1	0.32	0.30	65/90	2.0	0.06
	6	2	0.16	L13 DL	B1	4	2	0.32	0.45	50/95	2.0	0.08
	6	2	0.16	L13 D	B1	4	2	0.32	0.45	65/120	2.0	0.08
	8	1	0.145	L8 D	B2	4	1	0.32	0.33	65/90	2.0	0.06
	8	1	0.145	L11 D	B2	4	1	0.32	0.33	60/85	2.0	0.06
	8	2	0.145	L13 DL	B1	4	2	0.32	0.50	50/95	2.0	0.10
	8	2	0.145	L16 DL	B1	4	2	0.32	0.43	60/150	2.0	0.11
	8	2	0.145	L16 D	B2	4	2	0.32	0.50	65/150	2.0	0.11
	13	1	0.165	L13 DL	B1	4	1	0.32	0.45	50/95	2.0	0.10
	13	1	0.165	L13 D	B1	4	1	0.32	0.45	65/120	2.0	0.10
TC-S	5	1	0.18	L11 DL	B2	4	5	0.32	0.28	60/95	2.0	0.07
	5	1	0.18	L11 D	B2	4	5	0.32	0.25	60/85	2.0	0.07
	5	2	0.18	L13 DL	B1	4	6	0.32	0.35	50/95	2.0	0.08
	5	2	0.18	L13 D	B1	4	6	0.32	0.40	65/120	2.0	0.08
	7	1	0.18	L11 DL	B1	4	5	0.32	0.30	60/95	2.0	0.07
	7	1	0.18	L11 D	B2	4	5	0.32	0.28	60/85	2.0	0.07
	7	2	0.18	L 13 DL	B1	4	6	0.32	0.45	50/95	2.0	0.09
	7	2	0.18	L 13 D	B1	4	6	0.32	0.45	65/120	2.0	0.09
	9	1	0.17	L11 DL	B1	4	5	0.32	0.32	60/95	2.0	0.07
	9	1	0.17	L11 D	B2	4	5	0.32	0.33	60/85	2.0	0.07
	9	2	0.17	L13 DL	B1	4	6	0.32	0.55	50/95	2.0	0.10
	9	2	0.17	L13 D	B1	4	6	0.32	0.55	65/120	2.0	0.10
	11	1	0.155	L11 DL	B1	4	5	0.32	0.43	60/95	2.0	0.08
	11	1	0.155	L11 D	B2	4	5	0.32	0.43	60/85	2.0	0.08

Note: *See page 49 for connection diagrams, dimensions and delivery information.*

Magnetic ballasts for compact fluorescent lamps

tw 130

4-36 W 240 V, 50 Hz

- Meets EN 61347-2-8 & EN 60921requirements
- Low power losses
- 100 % quality controlled
- Double wire terminals without screws
- Low harmonics
- Very low magnetic field
- Small size
- Long lifetime

Lamp				Ballast							Compensation	
Lamp type	Lamp wattage (W)	No. of lamps	Lamp current (A)	Ballast type	EEI	Dimen-sions (p.49)	Connec-tion (p.49)	Net weight (kg)	Inductive λ	Temp. rise Δt (°C)	Parallel Ck 230/250V ±10 % (µF)	Mains current (A)
T5	4	1	0.17	L 8 D	B2	4	1	0.32	0.25	60/90	2.0	0.05
	4	2	0.17	L 8 D	B2	4	2	0.32	0.35	60/90	2.0	0.06
	6	1	0.16	L 8 D	B2	4	1	0.32	0.30	60/90	2.0	0.05
	6	2	0.16	L 13 D	B2	4	2	0.32	0.45	65/110	2.0	0.08
	8	1	0.145	L 8 D	B2	4	1	0.32	0.33	60/90	2.0	0.06
	8	1	0.145	L 11 D	B2	4	1	0.32	0.33	65/90	2.0	0.06
	8	2	0.145	L 16 D	B2	4	2	0.32	0.45	65/90	2.0	0.10
	13	1	0.165	L 13 D	B2	4	1	0.32	0.45	65/110	2.0	0.08
TC-S	5	1	0.18	L 11 D	B2	4	5	0.32	0.25	65/90	2.0	0.06
	5	2	0.18	L 13 D	B2	4	6	0.32	0.40	65/110	2.0	0.08
	7	1	0.18	L 11 D	B2	4	5	0.32	0.30	65/90	2.0	0.07
	7	2	0.18	L 13 D	B2	4	6	0.32	0.45	65/110	2.0	0.09
	9	1	0.17	L 11 D	B2	4	5	0.32	0.33	65/90	2.0	0.07
	9	2	0.17	L 13 D	B2	4	6	0.32	0.55	65/110	2.0	0.10
	11	1	0.155	L 11 D	B2	4	5	0.32	0.43	65/90	2.0	0.08
TC-D	10	1	0.19	L 13 D	B2	4	5	0.32	0.35	65/110	2.0	0.08
	13	1	0.175	L 13 D	B2	4	5	0.32	0.45	65/110	2.0	0.08
	18	1	0.22	L 18 D	B1	4	5	0.32	0.45	65/155	2.0	0.12
	26	1	0.325	L 18 TL4	B2	2	5	0.65	0.42	45/80	3.5	0.17
	26	1	0.325	L 18 A-K	B2	1	3	0.61	0.43	55/90	3.5	0.17
	26	1	0.325	L 26 TS5-100	B2	3	5	0.50	0.43	50/110	3.5	0.17
	26	1	0.325	L 26 S-100	B2	5	5	0.44	0.45	60/150	3.5	0.17
	26	1	0.325	L 20 A-P [1]	C	1	5	0.56	0.45	60/90	3.0	0.17
TC-L	18	1	0.37	L 18 TL4	B2	2	3	0.65	0.29	45/80	4.0	0.15
	18	1	0.37	L 18 A-K	B2	1	3	0.61	0.32	55 /90	4.0	0.15
	18	1	0.37	L 20 A-P [1]	C	1	3	0.56	0.35	60/90	4.0	0.15
	18	2	0.37	L 36 TL2	B1	2	4	0.83	0.44	35/95	4.0	0.21
	18	2	0.37	L 36 A-K	B2	1	4	0.61	0.50	55/155	4.0	0.21
	18	2	0.37	L 36 A-T	B2	1	4	0.57	0.52	55/155	4.0	0.21
	18	2	0.37	L 40 A-P [1]	C	1	4	0.56	0.53	70/160	4.0	0.21
	24	1	0.345	L 18 TL4	B2	2	3	0.65	0.47	45/80	3.5	0.15
	24	1	0.345	L 26 TS5-100	B2	3	3	0.50	0.38	55/110	3.5	0.15
	24	1	0.345	L 20 A-P [1]	C	1	3	0.56	0.42	60/90	3.5	0.15
	36	1	0.43	L 36 TL2	B1	2	3	0.83	0.42	35/95	4.0	0.22
	36	1	0.43	L 36 A-K	B2	1	3	0.61	0.45	55/155	4.0	0.22
	36	1	0.43	L 36 A-T	B2	1	3	0.57	0.47	55/155	4.5	0.22
	36	1	0.43	L 40 A-P [1]	C	1	3	0.56	0.50	70/160	4.0	0.22
TC-DD[2]	16	1	0.195	L 16 D	B2	4	8	0.32	0.45	65/160	2.0	0.11
	28	1	0.32	L 18 TL4	B2	2	8	0.65	0.47	45/80	3.5	0.17
	28	1	0.32	L 20 A-P [1]	C	1	8	0.56	0.50	60/90	3.0	0.18
T-R[3]	22	1	0.40	L 30 A	B2	1	7	0.51	0.35	60/125	4.5	0.19

Note: *See page 49 for connection diagrams, dimensions and delivery information.*
1) Not available for European Union market
2) Cap GR8, also GR 10q; external starter required
3) Cap G10q

Connection diagrams

L-A... / L-T... / L-D

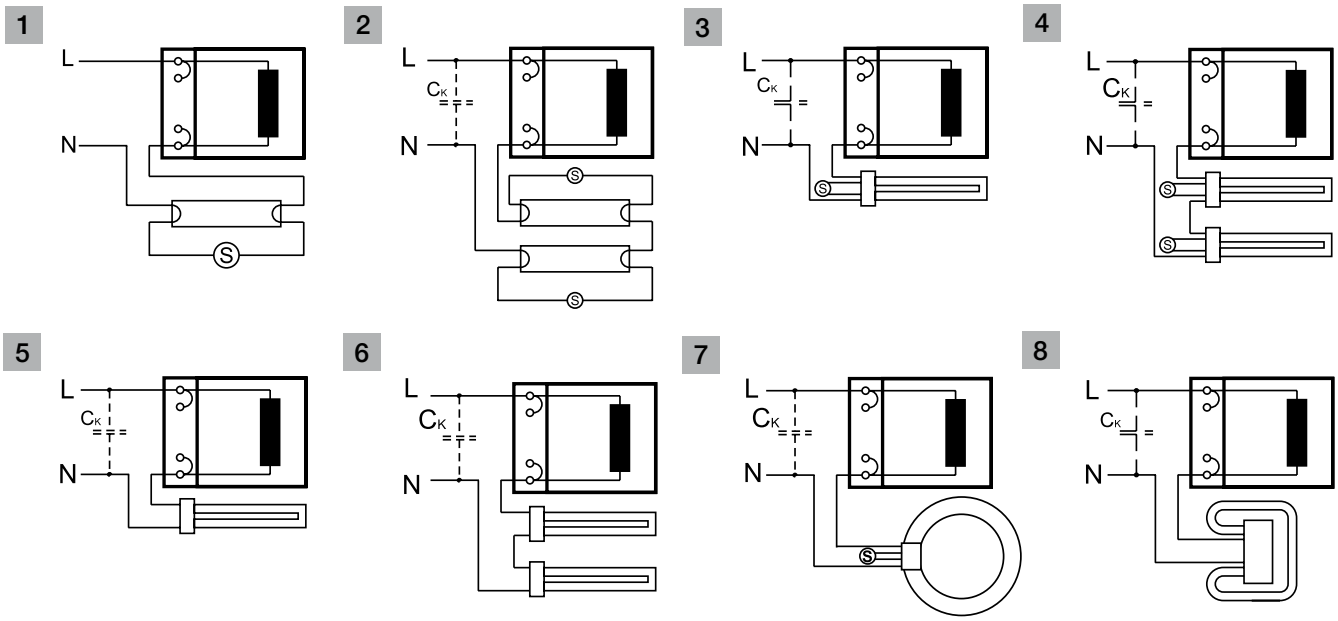

Dimensions

No.	1	2	3	4	5
Drawing	A	B	B	C	D
Length 'a' (mm)	150	150	110	85	110
Width 'b' (mm)	42	42	42	41.5	42
Height 'c' (mm)	28	28.8	28.8	28	26
'd' (mm)	140	140	100	73	100

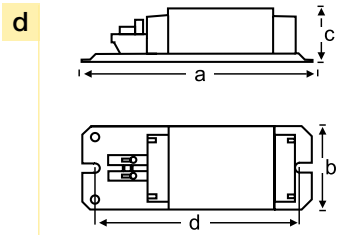

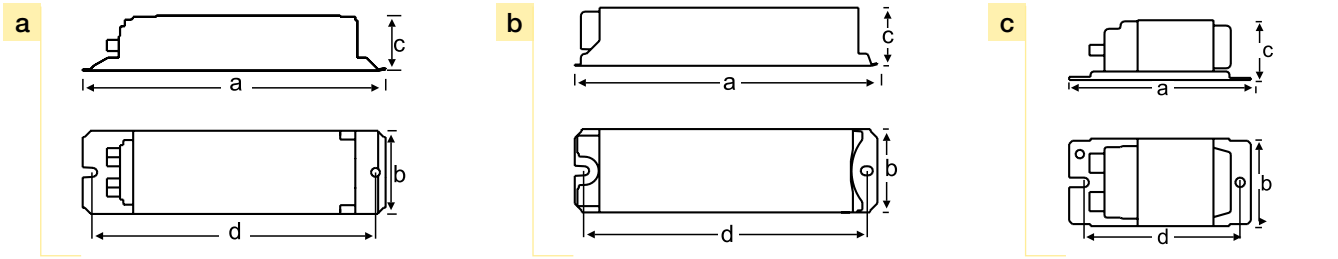

Delivery information

Delivery information

Ballast	Unit package			Transportation package					
					One-way pallet				
	Minimum delivery amount	Plastic binding strip	Carton box	Eur pallet 1200 x 820 (pcs.)	1080 x 770 (pcs.)	730 x 650 (pcs.)	1120 x 730 (pcs.)	Pallet weight (kg)	Pallet height (cm)
L 18 - 36TL	10	X		1250	1400	840	-	720-1190	53
L...TS / TLD, L 21TL	10	X		2100	1500	-	-	1010-1159	63
L 15 - 40 A...	10	X		2000 1000	2000	960	-	A/AK 602-1256 AP/AT 545-1135	68 68
L...D / DL	30		X	1800	-	-	1800	612	40
L 26 S-100mm	8	X		2016	-	-	-	925	46

Electronic HID ballasts for Discharge lamps

The growing demand on energy efficiency in lighting is also leading to a rapid increase in the use of electronic ballasts in HID luminaires. Helvar ballast range ensures low energy consumption with A2 energy efficiency classification. The electronic HID ballast range for 20-150 W discharge lamps fulfils the need for high quality lighting and modern, compact luminaires for indoor use.

Luminaires with Helvar electronic HID ballasts are for use in various environments e.g. spotlight installations, stores, shopping malls, museums, show venues and corridors.

Excellent colour stability throughout the lamp life, flicker free light and long lamp life are all typical properties of Helvar electronic HID ballasts. The ballast range is available for use directly in luminaires or for independent purposes with strain relief.

Electronic Ballasts for High Intensity Discharge Lamps

20 -150 W 220-240 V, 50-60 Hz

- For indoor use only
- Unique solution for protection against mains transients, patent pending
- Pioneering strain relief available for independent use, fits all sizes, patent pending
- Square wave form lamp current
- Flickerless light
- Low losses
- Protection class I
- For HI & C-HI lamps
- Over temperature protection
- EOL protection (under / over lamp voltage, rectification), lamp missing / not igniting

A2*

Lamp type	Wattage	Ballast	BEC [2]	Power losses (W)	Dimensions (no.)	Circuit power (W)	Mains current (A)	Power factor	Weight (g)	Lamp power (W)	Ignition voltage (kV pk)
HI	20	EP1x20h	A2	3.5	1	23.5	0.11-0.10	> 0.95	135	20	< 5
	35	EP1x35h	A2	4.5	1	43.5	0.20-0.18	> 0.98	135	39	< 5
	50	EP1x50h [1]	A2	5.5	2	55.5	0.25-0.23	> 0.98	190	50	< 5
	70	EP1x70h	A2	6.8	2	79.8	0.36-0.33	> 0.99	195	73	< 5

1) Preliminary information

2) Ballast efficiency class, according to European Comission Regulation No. 245/2009.
Ballasts meet the 3rd stage (year 2017) energy efficiency requirements (table 2 on page 52)

Note: *For detailed lamp compatibility information please see page 53*

5

Dimensions

NO.	1	2
LENGTH 'a' (mm)	95	105
WIDTH 'b' (mm)	60	65
HEIGHT 'c' (mm)	30	30
'd' (mm)	51	56
'e' (mm)	82	92
'f' (mm)	141	151
'g' (mm)	31.5	31.5

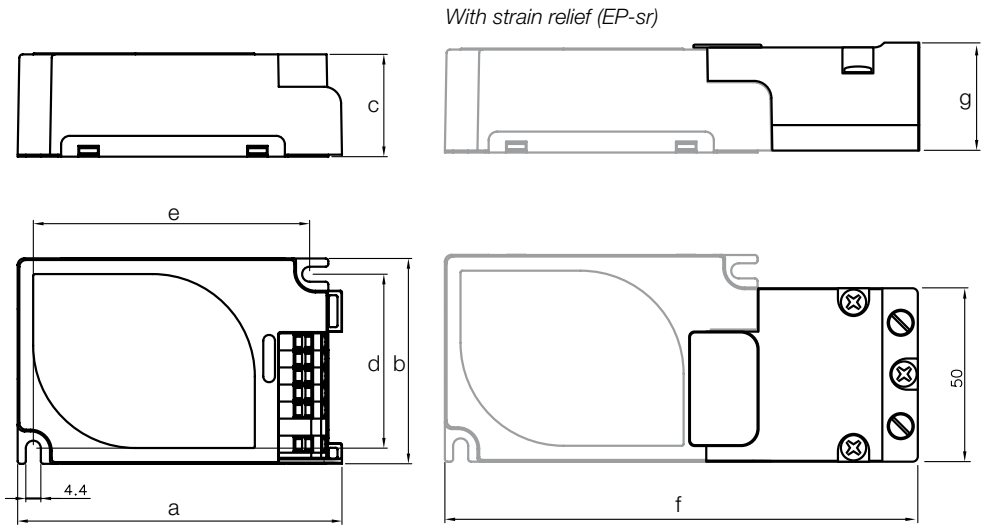

Delivery information

Ballast	Unit package		Transportation package		
	Minimum delivery amount	Carton box	EUR pallet 1200 x 800 (pcs.)	Pallet weight (kg)	Pallet height (cm)
EP1x20h	10	●	1920	280	66
EP1x35h	10	●	1920	280	66
EP1x70h	10	●	1680	350	72
EP-sr	60	●	-	-	-

Connection details

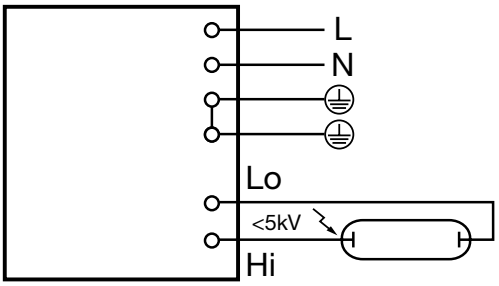

Ballast lamp distance:	150 pF / 1.5 m
Terminal type:	Push in
Terminals suitable for:	solid and stranded wire 0.5 - 2.5 mm²
Wire strip length:	10 - 11 mm

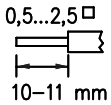

Characteristics

	EP1x...h
Max.temperature at t_C point	75 °C
Ambient temperature range	-20…+50 °C *
Storage temperature range	-40…+80 °C
Maximum relative humidity	no condensation
Type of protection	IP20
AC range	198-264 VAC
Earth leakage current	< 0,4 mA
Maximum working voltage (Uout)	350 V
Lifetime (90 % survival)	50 000 h, at Tc

** For independent use, Ta max. = 40 °C for 70 W, only if mounted on flammable surface. Otherwise Ta max. = 50 °C*

Standards

	EP1x...h
General, safety and particular requirements according to	IEC/EN 60347-1, IEC/EN 61347-2-12
EMC immunity according to	IEC/EN 61547
Mains current harmonics according to	IEC/EN 61000-3-2
Surge immunity according to	IEC/EN 61000-4-5
Radio frequency interference according to	IEC/EN 55015

5

Ballast efficiency class (A2)

Nominal lamp wattage P (W)	Minimum ballast efficiency η ballasts (%)
P ≤ 30	78
30 < P ≤ 75	85
75 < P ≤ 105	87
105 < P ≤ 405	90
P > 405	92

Table 2: Minimum efficiency requirements for ballasts for discharge lamps (3rd stage, year 2017)

Lamp compatibility for EP1x...

	20 W EP1x20h		35 W EP1x35h		70 W EP1x70h	
Manufacturer	TYPE	*(cap)*	TYPE	*(cap)*	TYPE	*(cap)*
OSRAM	HCI-TF	*(GU6.5)*	HCI-T	*(G12)*	HCI-T	*(G12)*
	HCI-TC	*(G8.5)*	HCI-TF	*(GU6.5)*	HCI-TC	*(G8,5)*
	HCI-R111	*(GX8.5)*	HCI-TC	*(G8.5)*	HCI-TS	*(RX7s)*
	HCI-PAR	*(E27)*	HCI-R111	*(GX8.5)*	HCI-T/P	*(E27)*
			HCI-PAR	*(E27)*	HCI-E/P	*(E27)*
			HCI-E/P	*(E27)*	HCI-R111	*(GX8.5)*
					HCI-PAR	*(E27)*
					HQI-T	*(G12)*
					HQI-TS	*(RX7s)*
					HQI-E	*(E27)*
PHILIPS	CDM-T	*(G12)*	CDM-T	*(G12)*	CDM-T	*(G12)*
	CDM-TC	*(G8.5)*	CDM-T Elite	*(G12)*	CDM-T Elite	*(G12)*
	CDM-Tm	*(GU6.5)*	CDM-TC	*(G8.5)*	CDM-TC	*(G8.5)*
	CDM-Rm	*(GX10)*	CDM-TC Elite	*(G8.5)*	CDM-TC Elite	*(G8.5)*
	CDM-R111	*(GX8.5)*	CDM-Tm Elite	*(GU6.5)*	CDM-R	*(E27)*
			CDM-Rm Elite	*(GX10)*	CDM-R Elite	*(E27)*
			CDM-R	*(E27)*	CDM-TD	*(RX7s)*
			CDM-R Eite	*(E27)*	CDM-TP	*(PG12-2)*
			CDM-R111	*(GX8.5)*	CDM-R111	*(GX8.5)*
GE	CMH 20/T	*(G12)*	CMH 35/T	*(G12)*	CMH 70/T	*(G12)*
	CMH 20/T	*(G8.5)*	CMH 35/T	*(G8.5)*	CMH 70/T	*(G8.5)*
	CMH 20/T	*(GU6.5)*	CMH 35/T	*(GU6.5)*	CMH 70/TC	*(G8.5)*
	CMH 20/PAR	*(E27)*	CMH 35/TC	*(G8.5)*	CMH 70/TD	*(RX7s)*
			CMH 35/MR16	*(GX10)*	CMH 70/PAR	*(E27)*
			CMH 35/PAR	*(E27)*	CMH 70/E	*(E27)*
			CMH 35/TD	*(RX7s)*		

Note: *Not suitable for lamps with internal ignitor*

Quantity of ballasts for miniature circuit breakers (MCB's)

Lamp(s)	EP-h	Quantity of ballasts per miniature circuit breaker 16 A Type C		Typical inrush current	1/2 value time	Calculated energy
		Based on I_{Cont}	Based on I_{peak}	I_{peak} (A)	Δt (µs)	$I_{peak}^2 \Delta t$ (A^2s)
1x20 HI	**EP1x20h**	104	75	22	135.0	0.05
1x35 HI	**EP1x35h**	58	52	32	137.0	0.10
1x70 HI	**EP1x70h**	32	32	41	188.0	0.22

Magnetic ballasts for HID lamps

Unlike fluorescent lamps, High Pressure Discharge (or HID lamps) work with a substantially higher gas pressure inside the lamp. The benefit of HID lamps is the higher light output that can be achieved compared to normal fluorescent lighting. As the lumen per watt ratio produced by HID lamps is substantially greater than with normal fluorescent lights, they are especially suitable for outdoor lighting and large indoor spaces.

HELVAR manufactures ballasts for all main HID lamp types. The high quality of HELVAR HID ballasts is guaranteed due to uncompromising material selection and 100 % testing of products.

Offering

Ballasts for high pressure mercury lamps

Helvar offers ballasts for lamps 50 W-400 W. Small wattage ballasts 50-125 W are equipped with push-in terminal and higher wattages 250-400 W are equipped with screw terminal. 250 W is also available with push-in terminal.

Ballasts for high pressure sodium lamps

Helvar offering covers ballasts for lamps from 50 W up to 1000 W. Ballast for 1000 W is supplied as twin version. Ballasts 50-600 W are available with or with-out internal thermal protector. As energy saving products with high quality is our main interest, Helvar has new power reduction ballasts for 50-150 W lamps.

Ballasts for metal halide lamps

Helvar offering covers ballasts for lamps from 35 W up to 1000 W. Ballasts for 1000 W are supplied as twin versions. Ballasts 35-400 W are available with or with-out internal thermal protector.

Ignitors for HID lamps

Helvar ignitors operate with the superimposed pulse principle. This concept is widely accepted as the most reliable system for ignition of discharge lamps. Superimposed ignition means that the ballast is not exposed to the very high ignition voltage produced by the ignitor. Helvar offering covers standard versions and timer versions for lamps 35-1000 W. Also intelligent digital timer versions with continuous lamp state check are available for lamps 100-600 W.

Magnetic ballasts for high pressure mercury lamps

tw 130

80/50 W - 125/80 W 230, 240, 230/240 V, 50 Hz

- Meets EN 61347-2-9 & EN 60923 requirements
- Very low magnetic field
- 100 % quality controlled
- Low power losses
- Low harmonics
- Low noise
- Long lifetime

	Lamp				Ballast						Compensation	
Lamp type	Lamp wattage (W)	Lamp current (A)	Ballast type	Voltage	Power losses (W) [1]	Dimen-sions (p.65)	Connec-tion (p.64)	Net weight (kg)	Inductive λ	Temp. rise Δt (°C)	Parallel Ck 230/250V ±10 % (µF)	Mains current (A)
HM	80/50	0.80/0.62	E80/50LU	230	12.8/10.0	1	1	1.22	0.50/0.42	65/55	8.0	0.45/0.30
	125/80	1.15/0.80	E125/80LU	230	14.5/11.5	1	1	1.22	0.55/0.50	70/60	10.0	0.70/0.45
	125/80	1.15/0.80	E125/80LU	240	15.0/12.0	1	1	1.22	0.55/0.50	70/60	10.0	0.70/0.45
	125/80	1.15/0.80	E125/80LU	230 240	13.4/11.0 14.0/11.6	1	2	1.22	0.55/0.50	70/60	10.0	0.70/0.45
	125/80	1.15/0.80	E125/80LUP	230	14.5/12.5	1	1	1.22	0.55/0.50	70/60	10.0	0.70/0.45
	125/80	1.15/0.80	E125/80LUP	240	15.0/12.0	1	1	1.22	0.55/0.50	70/60	10.0	0.70/0.45

1) Winding at 25 °C

Note: *P in ballast type name means built-in thermal protector (eg. E80/50LUP)*

Magnetic ballasts for high pressure mercury lamps

tw 130 & 140

50-400 W 220, 230, 240, 230/240 V, 50 Hz

- Meets EN 61347-2-9 & EN 60923 requirements
- Very low magnetic field
- 100 % quality controlled
- Low power losses
- Low harmonics
- Low noise
- Long lifetime

	Lamp				Ballast						Compensation	
Lamp type	Lamp wattage (W)	Lamp current (A)	Ballast type	Voltage	Power losses (W) [1]	Dimen-sions (p.65)	Connec-tion (p.64)	Net weight (kg)	Inductive λ	Temp. rise Δt (°C)	Parallel Ck 230/250V ±10 % (µF)	Mains current (A)
HM	80	0.80	E 80 LU	230	12.0	1	4	1.22	0.50	65	8.0	0.45
	80	0.80	E 80 LU	240	12.4	1	4	1.22	0.50	65	8.0	0.45
	125	1.15	E 125 LU	220	13.2	1	4	1.21	0.55	70	10.0	0.70
	125	1.15	E 125 LU	230	13.7	1	4	1.22	0.55	70	10.0	0.70
	125	1.15	E 125 LU	230 240	12.9 13.5	1	1	1.22	0.55	70	10.0	0.70
	250	2.13	E 250 SE [3]	230	19.0	8	5	1.86	0.55	75	18.0	1.40
	250	2.13	E 250 SE [3]	240	20.0	8	5	1.86	0.55	75	18.0	1.40
	250	2.13	E 250 T,F [2] [4] [5]	230	22.0	2,5	7	2.10	0.55	65	18.0	1.40
	250	2.13	E 250 T [2] [4] [5]	240	23.0	2	8	2.10	0.55	70	18.0	1.40
	250	2.13	E 250 T,F [2] [4] [5]	230 240	22.0 23.0	2,5	9	2.10	0.55	65 70	18.0	1.40
	400	3.25	E 400 SE [4]	230	28.0	10	5	3.00	0.57	75	25.0	2.15
	400	3.25	E 400 SE [4]	240	29.0	10	5	3.00	0.56	75	25.0	2.15
	400	3.25	E 400 T [2] [4] [5]	230	25.4	3	7	3.16	0.60	65	25.0	2.15
	400	3.25	E 400 F [2] [4] [5]	240	26.6	6	8	3.16	0.60	70	25.0	2.15
	400	3.25	E 400 TP,FP [2] [4] [5]	230 240	25.4 26.6	3,6	10	3.16	0.60	65 70	25.0	2.15
	400	3.25	E 400 TL [2] [4] [5]	220 230	27 29	4	9	3.0	0.59	65 70	25	2.15
	400	3.25	E 400 TL [2] [4] [5]	230 240	29 31	4	11	3.1	0.57	70	25	2.15
	400	3.25	E 400 TLP [2] [4] [5]	230 240	29 31	4	12	3.1	0.57	70	25	2.15

1) Winding at 25 °C
2) T-type = two and four point fixing
F-type = four point fixing
3) With push-in terminals
4) With screw terminals
5) Product has tw140

Note: *P in ballast type name means built-in thermal protector (eg. E400 TP or NK70LUPK)*

Magnetic ballasts for high pressure sodium lamps

tw 130 & 140 35-100 W 220, 220/230, 230, 240, 230/240 V, 50 Hz

- Meets EN 61347-2-9 & EN 60923 requirements
- Very low magnetic field
- 100 % quality controlled
- Low power losses
- Low harmonics
- Low noise
- Long lifetime

	Lamp					Ballast					Compensation	
Lamp type	Lamp wattage (W)	Lamp current (A)	Ballast type	Voltage	Power losses (W) [1]	Dimen-sions (p.65)	Connec-tion (p.64)	Net weight (kg)	Inductive λ	Temp. rise Δt (°C)	Parallel Ck 230/250V ±10 % (µF)	Mains current (A)
	50	0.75	NK 50 LU	230 240	12.0 12.5	1	13	1.22	0.38	70	8.0	0.33
	50	0.75	NK 50 LUP	230 240	12.0 12.5	1	15	1.22	0.38	70	8.0	0.33
	70	1.0	NK 70 LU	220 230	14.5 14.8	1	13	1.22	0.39	70	12.0	0.43
	70	1.0	NK 70 LU	230 240	14.8 15.0	1	13	1.22	0.39	70	12.0	0.43
	70	1.0	NK 70 LU	240	15.0	1	28	1.22	0.39	70	12.0	0.43
	70	1.0	NK 70 LUP	230 240	14.8 15.0	1	15	1.22	0.39	70	12.0	0.43
	70	1.0	NK 70 LUH	220	16.5	1	28	1.18	0.39	75	12.0	0.43
	70	1.0	NK 70 LUPK	240	14.0	1	29	1.22	0.39	65	12.0	0.43
	70	1.0	NK 70 LUPK	230 240	13.5 14.0	1	15	1.22	0.39	65	12.0	0.43
HS	70/50	1.0/0.75	NK 70/50 LU	230 240	14.5/11.0 15.0/11.5	1	14	1.22	0.39/0.38	75/60	12.0/8.0	0.43/0.33
	70/50	1.0/0.75	NK 70/50 LUP	230	14.5/11.0	1	15	1.22	0.39/0.38	75/60	12.0/8.0	0.43/0.33
	100	1.2	NK 100 LU	230 240	15.6 16.6	1	13	1.22	0.44	80	12.0	0.56
	100	1.2	NK 100 LUP	230 240	15.6 16.6	1	13	1.22	0.44	80	12.0	0.56
	100/70	1.2/1.0	NK 100/70 SEP	230	14.5/11.5	13	15	1.27	0.41/0.35	75/65	12.0/12.0	0.56/0.43
	150	1.8	NK 150 TL [2]	220 230	20 21	3	18	1.80	0.41	75	20	0.9
	150	1.8	NK 150 TL [2]	230 240	21 22	3	21	1.80	0.40	75	20	0.9
	150	1.8	NK 150 TLP [2]	230 240	21 22	3	22	1.80	0.40	75	20	0.9
	150	1.8	NK 150 SE	230 240	18.0 19.0	8	15	1.85	0.41	75	20	0.9
	150	1.8	NK 150 SEP [3]	230 240	18.0 19.0	8	15	1.85	0.41	75	20	0.9
	150	1.8	NK 150 SEPK	230 240	17.5 18.5	9	15	2.6	0.40	65	20	0.9

1) Winding at 25 °C
2) Product has tw140
3) Available also with bottom length 133 mm

Note: *P in ballast type name means built-in thermal protector (eg. E400 TP or NK70LUPK)*

Magnetic ballasts for high pressure sodium lamps

tw 130 & 140

150-1000 W 220/230, 230, 240, 230/240 V, 50 Hz

- Meets EN 61347-2-9 & EN 60923 requirements
- Very low magnetic field
- 100 % quality controlled
- Low power losses
- Low harmonics
- Low noise
- Long lifetime
- Multiple fixing point variations

	Lamp			Ballast							Compensation	
Lamp type	Lamp wattage (W)	Lamp current (A)	Ballast type	Voltage	Power losses (W) 1)	Dimen-sions (p.65)	Connec-tion (p.64)	Net weight (kg)	Inductive λ	Temp. rise Δt (°C)	Parallel Ck 230/250V ±10 % (µF)	Mains current (A)
HS	250	3.0	NK 250 SE	230	29	10	23	3.00	0.40	70	32	1.4
	250	3.0	NK 250 SE	240	30	10	23	3.00	0.38	80	32	1.4
	250	3.0	NK 250 SEP	230 240	29 30	10	15	3.00	0.38	75 80	32	1.4
	250	3.0	NK 250 T 2) 3)	230	28	3,6	16	3.15	0.42	70	32	1.4
	250	3.0	NK 250 T,F 2) 3)	230 240	28 29	3,6	18	3.15	0.42	70 75	32	1.4
	250	3.0	NK 250 TP,FP 2) 3)	230 240	28 29	3,6	19	3.15	0.42	70 75	32	1.4
	250	3.0	NK 250 TLK 3)	220 230	29 30	3	21	2.75	0.43	75	32	1.4
	250	3.0	NK 250 TLK 3)	230 240	30 32	3	18	2.75	0.43	75 80	32	1.4
	250	3.0	NK 250 TLPK 3)	230 240	30 32	3	19	2.75	0.43	75 80	32	1.4
	400	4.4	NK 400 T,F 2) 3)	230	32	4,7	16	4.4	0.40	70	50	2.2
	400	4.4	NK 400 T,F 2) 3)	230 240	32 33	4,7	18	4.4	0.40	70 75	50	2.2
	400	4.4	NK 400 TP,FP 2) 3)	230 240	32 33	4,7	19	4.4	0.40	70 75	50	2.2
	400	4.4	NK 400 TE, FE 2) 3)	230 240	35 36	4,7	21	3.6	0.41	75	50	2.2
	400	4.4	NK 400 TEP, FEP 2) 3)	230 240	35 36	4,7	22	3.6	0.41	75	50	2.2
	600	6.2	NK 600 T/2 2) 3) 4)	230 240	60 62	6	20	6.3	0.44	75 80	65	3.0
	600	6.2	NK 600 SE	230	43	14	23	6.9	0.47	75	65	3.0
	1000	10.3	NK 1000 F/2 2) 3) 4)	230 240	75 80	7	20	8.8	0.45	80	100	5.3 5.0

1) Winding at 25 °C

2) T-type = two and four point fixing F-type = four point fixing

3) Product has tw140

4) Supplied as 2 identical ballasts both with the dimensions indicated.
All other technical values are stated for the combined product operating one lamp.

Note: *P in ballast type name means built-in thermal protector (eg. NK400 TP or NK600 SEP)*

Power reduction ballasts for high pressure sodium lamps

tw 130 & 140

50 - 400 W 230 V, 50 Hz

- Meets EN 61347-2-9 & EN 60923 requirements
- Very low magnetic field
- 100 % quality controlled
- Low power losses
- Low harmonics
- Low noise
- Long lifetime

Lamp						Ballast							Compensation	
Lamp type	Lamp wattage (W)	Lamp current (A)	Ballast type	Circuit power [3] Full (W)	Circuit power [3] Reduced (W)	Luminois flux (Φ) reduction	Circuit power reduction	Dimen-sions (p.65)	Connec-tion (p.64)	Net weight (kg)	Inductive λ	Temp. rise Δt (°C)	Parallel Ck 230/250V ±10 % (µF)	Mains current (A)
HS	50	0.75	NK50/35LUP [1]	63	40	~50%	37%	1	24	1.22	0.38	70	8.0	0.33
	70	1.0	NK70/50LUP [2]	84	59	~50%	29%	1	24	1.22	0.39	75	12.0	0.43
	100	1.2	NK100/70SEP [2]	115	79	~50%	32%	13	24	1.27	0.41	75	12.0	0.56
	150	1.8	NK150/50% SEP	166	107	~50%	36%	8	24	1.85	0.43	75	20	0.90
	250	3.0	NK250/50% SEP[1]	274	171	~50%	38%	12	24	3.4	0.41	75	32	1.4
	400	4.4	NK400/50% TP [4]	434	288	~50%	34%	4	24	4.4	0.40	75	50	2.2

1) Not ENEC approved

2) Can also be used as a bi-power ballast, see page 58

3) Measured with a certain operating lamp openly mounted. Measurement results may vary from lamp to lamp

4) Product has tw140

6

Note: *P in ballast type name means built-in thermal protector (eg. NK100/70SEP)*

Operating instructions

- The circuit power can be reduced by using a power reduction ballast with extra tapping for higher impedance, together with a power reduction switch.
- Lamps must always be ignited with the higher rated wattage of a ballast and not switched down to reduced wattage before 10 minutes of normal operation after the ignition of a lamp.

Magnetic ballasts for metal halide lamps

tw 130 & 140

35-150 W 220/230 V, 230, 230/240 V, 50 Hz

- Meets EN 61347-2-9 & EN 60923 requirements
- Very low magnetic field
- 100 % quality controlled
- Low power losses
- Low harmonics
- Low noise
- Long lifetime
- Multiple fixing point variations

	Lamp				Ballast						Compensation	
Lamp type	Lamp wattage (W)	Lamp current (A)	Ballast type	Voltage	Power losses (W) [1]	Dimen-sions (p.65)	Connec-tion (p.64)	Net weight (kg)	Inductive λ	Temp. rise Δt (°C)	Parallel Ck 230/250V ±10 % (µF)	Mains current (A)
HI	35	0.53	NK 35 LUP	230 240	9.0 9.4	1	15	1.22	0.38	50	6.0	0.23
	70	1.0	NK 70 LU	220 230	14.5 14.8	1	13	1.22	0.39	70	12.0	0.43
	70	1.0	NK 70 LU	240	15.0	1	28	1.22	0.39	70	12.0	0.43
	70	1.0	NK 70 LUP	230 240	14.8 15.0	1	15	1.22	0.39	70	12.0	0.43
	70	1.0	NK 70 LUPK	240	14.0	1	29	1.22	0.39	65	12.0	0.43
	70	1.0	NK 70 LUPK	230 240	13.5 14.0	1	15	1.22	0.39	65	12.0	0.43
	70	1.0	NK 70 LUH	220	16.5	1	19	1.18	0.39	75	12.0	0.43
	100	1.1	NK 100 LUP	230 240	15.6 16.6	1	13	1.22	0.44	80	12.0	0.56
	100/70	1.1/1.0	NK 100/70 SEP	230	14.5/11.5	13	13	1.27	0.41/0.35	75/65	12.0/12.0	0.56/0.43
	150	1.8	NK 150 TL [2) 3)]	220 230	20 21	3	18	1.80	0.41	75	20	0.9
	150	1.8	NK 150 TL [2) 3)]	230 240	21 22	3	21	1.80	0.40	75	20	0.9
	150	1.8	NK 150 TLP [2) 3)]	230 240	21 22	3	22	1.80	0.40	75	20	0.9
	150	1.8	NK 150 SEP [4) 5)]	230 240	18.0 19.0	8	15	1.85	0.41	75	20	0.9
	150	1.8	NK 150 SEPK [4)]	230 240	17.5 18.5	9	15	2.6	0.40	65	20	0.9

1) Winding at 25 °C
2) T-type = two and four point fixing
F-type = four point fixing
3) Product has tw140
4) With push-in terminals
5) Available also with bottom length 133 mm

Note: *P in ballast type name means built-in thermal protector (eg. NK70LUPK)*

Magnetic ballasts for metal halide lamps

tw 130 & 140

250-1000 W 220/230 V, 230, 230/240 V, 50 Hz

- Meets EN 61347-2-9 & EN 60923 requirements
- Very low magnetic field
- 100 % quality controlled
- Low power losses
- Low harmonics
- Low noise
- Long lifetime
- Multiple fixing point variations

	Lamp			Ballast							Compensation	
Lamp type	Lamp wattage (W)	Lamp current (A)	Ballast type	Voltage	Power losses (W) 1)	Dimen-sions (p.65)	Connec-tion (p.64)	Net weight (kg)	Inductive λ	Temp. rise Δt (°C)	Parallel Ck 230/250V ±10 % (µF)	Mains current (A)
HI	250	3.0	NK 250 TLK 5)	220 230	29 30	3	21	2.75	0.43	75	32	1.4
	250	3.0	NK 250 TLK 5)	230 240	30 32	3	18	2.75	0.43	75 80	32	1.4
	250	3.0	NK 250 TLPK 5)	230 240	30 32	3	19	2.75	0.43	75 80	32	1.4
	250	3.0	NK 250 SE	230	29	10	23	3.00	0.40	70	32	1.4
	250	3.0	NK 250 SE	240	30	10	23	3.00	0.38	80	32	1.4
	250	3.0	NK 250 SEP	230 240	29 30	10	15	3.00	0.38	80	32	1.4
	250	3.0	NK 250 TP,FP 2) 5)	230 240	28 29	3,6	19	3.15	0.42	70 75	32	1.4
	400	3.5	E 400 SE	230	29.0	10	23	3.00	0.51	80	35	2.2
	400	3.5	E 400 SE	240	30.0	10	23	3.00	0.49	80	35	2.2
	400	4.1	NK 400 TP,FP 2) 4) 5)	230 240	32 33	4,7	19	4.40	0.40	70 75	45	2.2
	400	4.1	NK 400 TE, FE 2) 4) 5)	230 240	35 36	4,7	21	3.6	0.41	75	45	2.2
	400	4.1	NK 400 TEP, FEP 2)4)5)	230 240	35 36	4,7	22	3.6	0.41	75	45	2.2
	400	3.5	H 400 T 2) 5)	230 240	24.9 26	3,6	18	3.18	0.48	70 75	35	2.2
	400	3.5	H 400 TP 2) 5)	230 240	24.9 26	3,6	22	3.18	0.48	70 75	35	2.2
	400	3.5	E 400 T 2) 5)	230	25	3	16	3.16	0.49	80	35	2.15
	400	3.5	E 400 F 2) 5)	240	26	6	16	3.16	0.49	80	35	2.15
	400	3.5	E 400 TL 5)	220 230	27 29	4	18	3.0	0.55	75	35	2.15
	400	3.5	E 400 TL 5)	230 240	29 31	4	21	3.1	0.53	75 80	35	2.15
	400	3.5	E 400 TLP 5)	230 240	29 31	4	22	3.1	0.53	75 80	35	2.15
	400	3.5	E 400 TP,FP 2) 5)	230 240	25 26	3,6	22	3.16	0.49	80	35	2.15
	1000	9.5	H 1000 F/2 2) 3) 5)	230 240	75 80	4	20	8.8	0.49	85	100	4.6

1) Winding at 25 °C
2) T-type = two and four point fixing
F-type = four point fixing
3) Supplied as 2 identical ballasts both with the dimensions indicated
All other technical values are stated for the combined product operating one lamp
4) Check lamp manufacturers data to ensure they specify that the lamp is suitable for HPS ballast
5) Product has tw140

Note: *P in ballast type name means built-in thermal protector (eg. E400 TP or NK70LUPK)*

Magnetic ballasts for high intensity discharge lamps

CE tw 130 &140

150-1000 W 220 V, 220/230 V, 50 Hz

- Meets EN 61347-2-9 & EN 60923 requirements
- Very low magnetic field
- 100 % quality controlled
- Low power losses
- Low harmonics
- Low noise
- Long lifetime

	Lamp			Ballast							Compensation	
Lamp type	Lamp wattage (W)	Lamp current (A)	Ballast type	Voltage	Power losses (W) [1]	Dimensions (p.65)	Connection (p.64)	Net weight (kg)	Inductive λ	Temp. rise Δt (°C)	Parallel Ck 230/250V ±10 % (µF)	Mains current (A)
HS / HI	150	1.8	NK 150 SE [4]	220	18	11	23	1.8	0.40	75	20	0.9
	250	1.8	NK 250 SEL	220	27	10	23	2.6	0.42	80	32	1.4
	250	3.0	NK 250 T [2] [7]	220	27	3,6	25	3.1	0.42	70	32	1.4
	1000	10.3/9.5	NK/H 1000 T/2 [3] [7]	220(NK) [6] 220 (H) [6]	70 60	4	20	8.8	0.45 0.49	80 70	100	5.0
HS	400	4.4	NK 400 TE [5] [7]	220	32	4	26	3.6	0.43	75	50	2.2
	400	4.4	NK 400 T [2] [5] [7]	220	31	4,7	25	4.4	0.40	70	50	2.2
	1000	10.3	NK 1000 F/2 [3] [7]	220	72	7	27	8.8	0.45	80	100	5.3
HM	250	2.13	E 250 T [2] [7]	220	20	2,5	6	2.1	0.55	60	18	1.4
	400	3.25	E 400 T [2] [7]	220	24	3,6	6	3.1	0.60	70	25	2.15

1) Winding at 25 °C
2) T-type = two and four point fixing
F-type = four point fixing
3) Supplied as 2 identical ballasts both with the dimensions indicated
All other technical values are stated for the combined product operating one lamp
4) With push-in terminals
5) Can also be used with certain 400 W HI-lamps. Check lamp manufacturers data to ensure they specify that the lamp is suitable for HPS ballast
6) NK-output for high pressure sodium lamps, H-output for metal halide lamps
7) Product has tw140

Note: *P in ballast type name means built-in thermal protector (eg.* NK 250 TP *or* NK 250 FP*)*

Connection diagrams

HID-ballasts

1
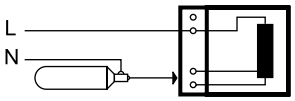

2
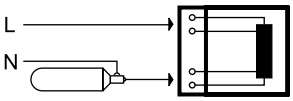

3
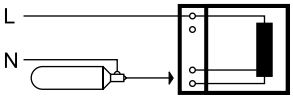

4
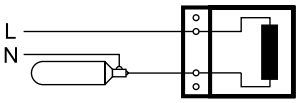

5
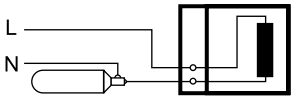

6
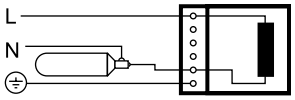

7
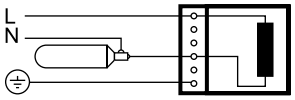

8
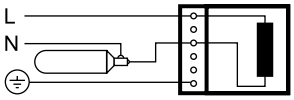

9
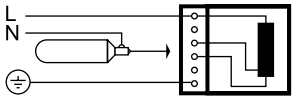

10
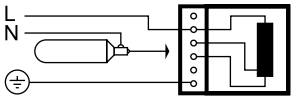

11
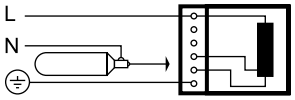

12
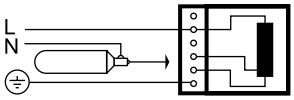

13
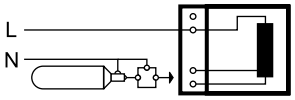

14
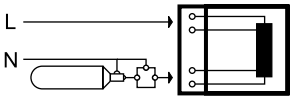

15
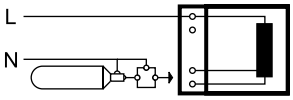

16
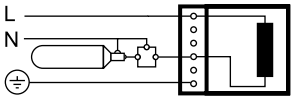

17
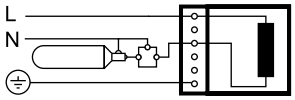

18
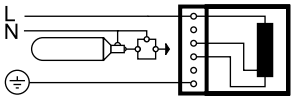

19
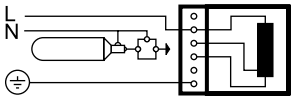

20
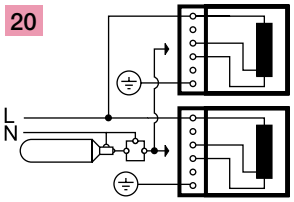

21
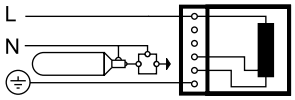

22
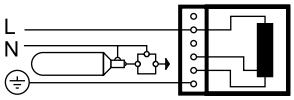

23
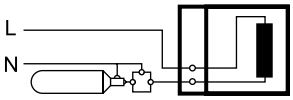

24
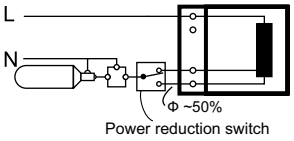

25
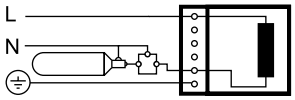

26
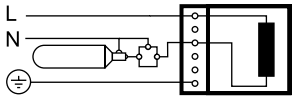

27
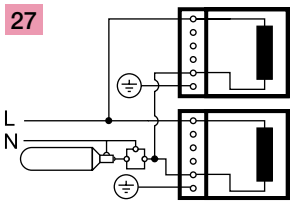

28
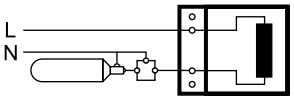

29
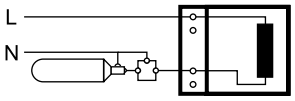

Dimensions

NO.	1	2	3	4	5	6	7	8	9	10	11	12	13	14
DRAWING	**a**	**b**	**b**	**b**	**c**	**c**	**c**	**d**	**d**	**d**	**d**	**e**	**f**	**e**
LENGTH 'a' (mm)	114	135	135	165	104	104	135	145	160	180	133	133	112	173
WIDTH 'b' (mm)	54	70	70	70	70	70	70	69	69	69	69	104	69	104
HEIGHT 'c' (mm)	45.5	85	85	85	85	85	85	53	53	53	53	90.5	53	90.5
'd' (mm)	95	120	120	150	90	90	100	120	140	155	120	120	95	160
'e' (mm)		35	35	35	90	90	100							
'f' (mm)		85	108	138	85	108	138							
'g' (mm)					80	80	90							

a

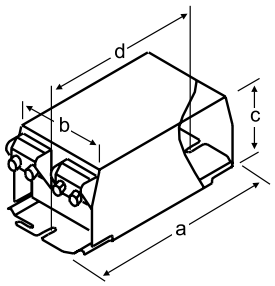

b

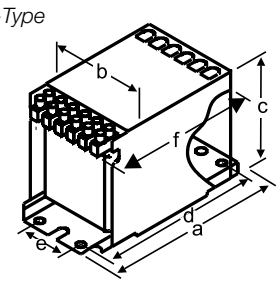

c

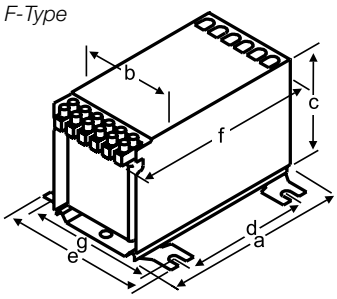

d

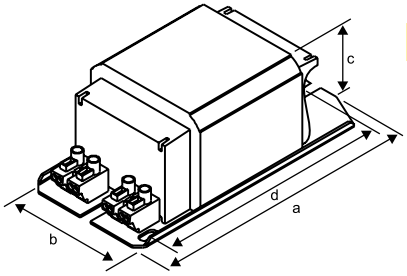

e

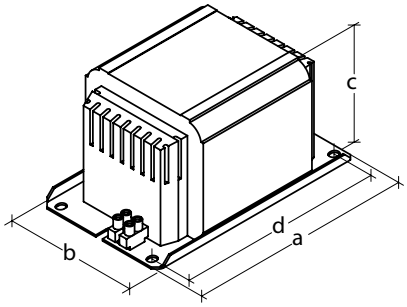

f

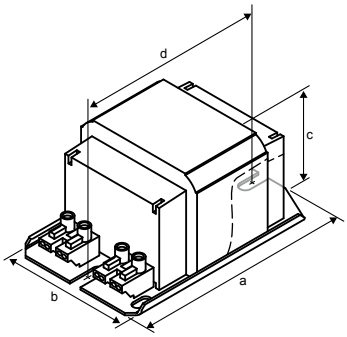

6

Delivery information

Ballast	Unit package			Transportation package				
	Minimum delivery amount	Plastic binding strip	Carton box	EURO pallet 1200 x 800	One-way pallet 730 x 650 (pcs.)	One-way pallet 730 x 1120 (pcs.)	Pallet weight (kg)	Pallet height (cm)
E-LU, E-LUP	4	●		432	960	527 - 1170	50	
E…LU/LUP/LUS NK …LU/LUP/LUS	4	●			432	960	527-1170	50
E250 - 400T H400T NK250T	5		●			300	530-750	48
E250 - 400F H400F NK250F NK400T/F, NK400/50% TP	4		●			240	530-1060	48
E…SE/SEP NK100/70SEP NK150-250SE/SEP	3	●		360-450-630			820-910	50-55
NK250/50% SEP	2	●		200			710	54
NK600 T,F/2 NK1000 T,F/2 H1000 F/2	2*		●			120 (240)	760-1060	48

Electronic superimposed pulse ignitors

tw 130

Without timer 220-240 V, 50-60 Hz

- Fully electronic
- Super-imposed pulse type
- Compact design
- Solid metal fixing screw
- Low inherent heating
- High thermal resistance
- Low power losses
- ENEC approved*

	L-70	L-150	HI-400M	HI-400S	L-600	L-1000S [2]
High pressure sodium (W)	35-70	70(DE) [3] -150	70(DE) [3] -400	70(DE) [3] -400	70(DE) [3] -600	70(DE) [3] -1000
Metal halide [1] (W)	-	35-150	35-400	35-400	35-400	35-1000
Ceramic metal halide [1] (W)	-	35-150	35-400	35-400	35-400	35-400
Max. contin. lamp current (A)	1	1.8	4.6	4.6	6.5	12
Operating voltage (V)	198-264	198-264	198-264	198-264	198-264	198-264
Cut-out voltage (V)	≤ 170	≤ 170	≤ 170	≤ 170	≤ 170	≤ 170
Ignition voltage (kV)	1.9 ... 2.3	4.0 ... 4.5	4.0 ... 4.5	4.0 ... 4.5	4.0 ... 4.5	4.0 ... 4.5
Impulse width (µs)	2 (1.5 kV)	1.4 (2.0 kV)	1.0 (2.0 kV)	1.0 (2.0 kV)	1.2 (2.0 kV)	1.5 (2.0 kV)
Phasing (°el)	60-90 / 240-270	60-90 / 240-270	60-90 / 240-270	60-90 / 240-270	60-90 / 240-270	60-90 / 240-270
Pulses per half cycle	2	3	3	3	3	3
Max. load capacitance (pF)	200	100	100	100	100	100
Internal losses (W)	< 1.0 (25 °C; 1 A)	< 1.0 (25 °C; 1.8 A)	< 3.4 (25 °C; 4.6 A)	< 3.3 (25 °C; 4.6 A)	< 4.0 (25 °C; 6.5 A)	< 6.0 (25 °C; 12 A)
Max. housing temperature (°C)	105	105	105	105	105	105
Min. ambient temperature (°C)	-30	-30	-30	-30	-30	-30
Weight (g)	130	130	130	160	230	430
Dimensions AxBxC (mm)	88x34x28	88x34x28	92x34x28	92x38x32	92x43x36	108x55x43

Note: *Suitability for lamps refers to most common lamps acc. to EN standards. Check also lamp manufacturer information of proper ignitor selection. Not suitable for lamps with low ignition voltage (~1 kV)*

1) See also recommended combinations, dimensions and connection on page 68

2) L-1000S is not ENEC approved

3) DE means double ended lamp

Minimum delivery amount 50 pcs.

Electronic superimposed pulse ignitors

tw 130

With timer 220-240 V, 50-60 Hz

- Fully electronic
- Super-imposed pulse type
- Compact design
- Solid metal fixing screw
- Low inherent heating
- High thermal resistance
- Low power losses
- ENEC approved

		LSI-70T1	LSI-150T20	LHI-400ST10	LSI-400ST20	LSI-600T20	LSI-1000T10 [2]
High pressure sodium	(W)	35-70	70(DE) [3] -150	70(DE) [3] -400	70(DE) [3] -400	70(DE) [3] -600	70(DE) [3] -1000
Metal halide [1]	(W)	-	35-150	35-400	35-400	35-400	35-1000
Ceramic metal halide [1]	(W)	-	35-150	35-400	35-400	35-400	35-400
Max. contin. lamp current	(A)	1	1.8	4.6	4.6	6.5	12
Cut out time	(min)	2	20	18	DIGITAL [1]	DIGITAL [1]	18
Operating voltage	(V)	198-264	198-264	198-264	198-264	198-264	198-264
Cut-out voltage	(V)	≤ 170	≤ 170	≤ 170	< 170	< 170	≤ 170
Ignition voltage	(kV)	1.9 ... 2.3	4.0 ... 4.5	3.5 ... 4.5	4.0 ... 4.5	4.0 ... 4.5	4.0 ... 4.5
Impulse width	(µs)	2 (1.5 kV)	1.4 (2.0 kV)	1.0 (2.0 kV)	0.9 (2.0 kV)	1.2 (2.0 kV)	1.7 (2.0 kV)
Phasing	(°el)	60-90 / 240-270	60-90 / 240-270	60-90 / 240-270	60-90 / 240-270	60-90 / 240-270	60-90 / 240-270
Pulses per half cycle		2	3	3	3	3	3
Max. load capacitance	(pF)	200	100	100	100	100	100
Internal losses	(W)	<1.0 (25 °C; 1A)	<1.0 (25 °C;1.8 A)	<3.0 (25 °C; 4.6 A)	<3.3 (25 °C; 4.6 A)	<4.0 (25 °C; 6.5 A)	<6.0 (25 °C; 12 A)
Max. housing temp.	(°C)	105	105	105	105	105	105
Min. ambient temp.	(°C)	-30	-30	-30	-30	-30	-30
Weight	(g)	130	130	160	160	230	460
Dimensions AxBxC	(mm)	88x34x28	88x34x28	92x38x32	92x38x32	92x43x36	108x55x43

Note: *Suitability for lamps refers to most common lamps acc. to EN standards. Check also lamp manufacturer information of proper ignitor selection.Not suitable for lamps with low ignition voltage (~1 kV)*

1) See also recommended combinations, dimensions and connection on page 68

2) LSI-1000T10 is not ENEC approved.

3) DE means double ended lamp

Minimum delivery amount 50 pcs.

Additional specifications and cut-out sequence for LSI-400ST20 & LSI-600T20

- Intelligent timer with µC for light source protection and energy saving operation
- Protective against power-line overvoltage
- Lamp protection during ignition
- Continous lamp-state check
- Stable ignition over a wide temperature range
- Radio-frequency interference level 10 % to standard timed version
- Long life performance
- Approval to EN 61347, EN 60927, EN 55014

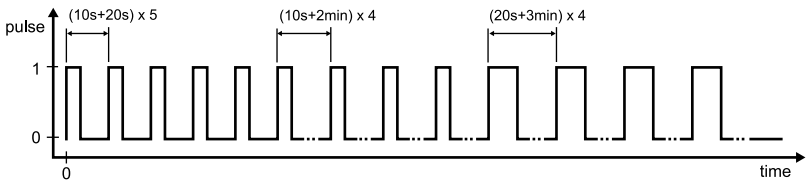

6

Helvar ignitors for high pressure sodium- and metal halide lamps

Ignitor	HIGH PRESSURE SODIUM									CERAMIC METAL HALIDE						METAL HALIDE [1]						
Watt	35	50	70	100	150	250	400	600	1000	35	70	100	150	250	400	35	70	100	150	250	400	1000
L-70																						
LSI-70T1																						
L-150																						
LSI-150T20																						
HI-400M										2)	2)					2)	2)					
HI-400S										2)	2)					2)	2)					
LHI-400ST10										2)	2)					2)	2)					
LSI-400ST20										2)	2)					2)	2)					
L-600				2)	2)					2)	2)					2)	2)	2)	2)			
LSI-600T20				2)	2)					2)	2)					2)	2)	2)	2)			
L-1000S				2)	2)					2)	2)	2)	2)			2)	2)	2)	2)			
LSI-1000T10				2)	2)					2)	2)	2)	2)			2)	2)	2)	2)			

Recommended combination

T1 Automatic cut-out 2 min
T10 Automatic cut-out 18 min
T20 Automatic cut-out 20 min

6

Note: *Suitability for lamps refers to most common lamps acc. to EN standards. Check also lamp manufacturer information of proper ignitor selection.*
1) Not suitable for lamps with low ignition voltage (~1 kV)
2) Used combination

Dimensions

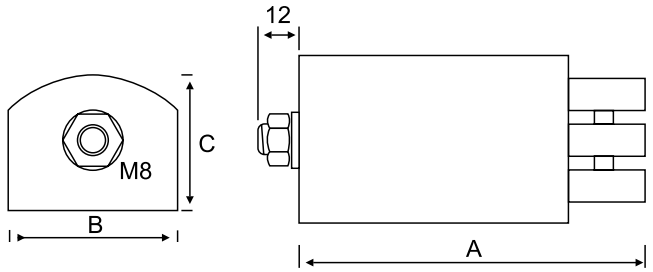

Ignitor	A X B X C (mm)
L-70	88x34x28
L-150	88x34x28
HI-400M	92x34x28
HI-400S	92x38x32
L-600	92x43x36
L-1000 / L-1000S	108x55x43
LSI-70T1	88x34x28
LSI-150T20	88x34x28
LHI-400ST10	92x38x32
LSI-400ST20	92x38x32
LSI-600T20	92x43x36
LSI-1000T10	108x55x43

Connection

Terminals: *3-pole D-L-N 2.5 mm² max*

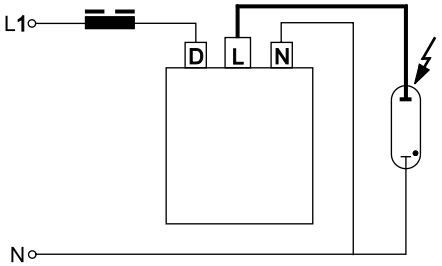

LED Drivers

Helvar's LED offering includes a range of Constant Current drivers including dimmable and non-dimmable solutions. The LED drivers can be used for indoor and outdoor applications for spot lights, down lights, flood lights and linear strip lighting.

The Helvar LED range is designed for easy installation and long life. All drivers provide power with high efficiency. The dimmable drivers ensure reliable and smooth dimming from 1 % - 100 %. Helvar's LED drivers are complemented by a full and compatible range of Helvar controls and sensor solutions, suitable for both luminaire based (µDim, iDim, MIMO3) and networked applications (DIGIDIM Router).

Outlook

Further exciting LED product developments are in the pipeline for 2012, showing Helvar's continuous commitment to supporting luminaire manufacturers in making a successful transition to LED. Stay in tune with our website for continuous new LED products.

1x6 W Constant Current LED driver

SELV

6 W 100 - 240 V, 50 - 60 Hz

- Selectable constant current output: 350 / 700 mA
- Universal supply voltage range
- Short circuit protection
- High efficiency, 0.80
- Linear enclosure with strain relief for independent use
- Accepts DC mains in case of central emergency battery
- IP20

Connections

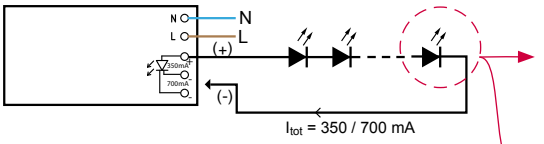

Rating Instruction

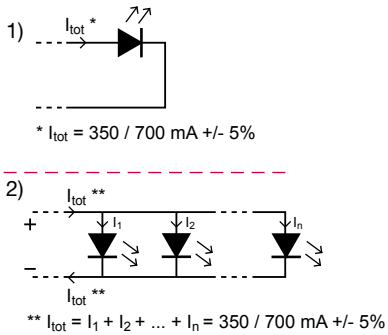

Note: *Not suitable for load side switching operation.*

Mains Characteristics

Voltage range	85 - 264 VAC
	100 - 264 VDC
Max mains current at full load	50 mA (at 240 VAC)
	140 mA (at 100 VAC)
Frequency	0 / 50 - 60 Hz
Maximum circuit power	9 W

Load Output

Output current	350 / 700 mA
U-OUT$_{max}$ (abnormal)	25 V
Max output power	7.0 W

I-OUT	350 mA	700 mA
U-OUT	7…16	7…10
λ	82	85
η @ max	80	80

Operating Conditions and Characteristics

Max.temperature at tc point	80 °C
Ambient temperature range	-20…+60 °C
Storage temperature range	-40…+80 °C
Maximum relative humidity	no condensation
Life time	50 000h, at TC max
	(90 % survival rate)

Connections and Mechanical Data

Wire size	0.5 - 1.5 mm^2
Wire type	solid core and fine-stranded
Max. wire length in the total output circuit between (+) & (-)	10 m
Weight	65 g

Conformity & Standards

General and safety requirements	EN 61347-1
Particular safety requirements for d.c. or a.c. supplied electronic controlgear for LED modules, acc. to	EN 61347-2-13
Thermal protection class	EN61347, C5e
Mains current harmonics, acc. to	EN 61000-3-2
Limits for Voltage Fluctuations and Flicker, acc to	EN 61000-3-3
Radio Frequency Interference, acc. to	EN 55015
Immunity standard, acc. to	EN 61547
Performance requirements, acc to	EN 62384

Compliant with relevant EU directives
ENEC, CE & SELV marked

Note: *See page 79 for dimensions, (no.1)*

1x20 W Constant Current LED driver

SELV

20 W 100 - 240 V, 50 - 60 Hz

- Selectable constant current output: 350 / 700 mA
- Universal supply voltage range
- Short circuit protection
- High efficiency, 0.86
- Linear enclosure with strain relief for independent use
- Accepts DC mains in case of central emergency battery
- IP20

Connections

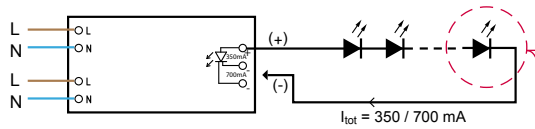

Rating Instruction

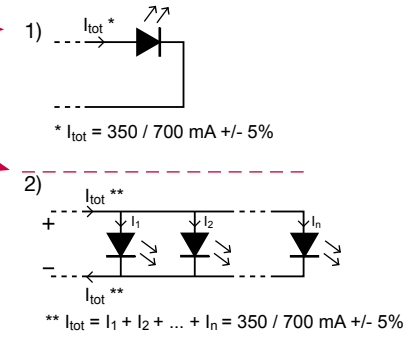

Supply Voltage Chaining* (only LL20-U-CC)

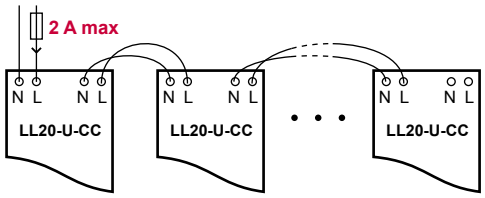

* max number of converters depends on supply voltage and load (7 pcs. max at full load)

Note: *Not suitable for load side switching operation.*

Mains Characteristics

Voltage range	85 - 264 VAC
	100 - 264 VDC
Max mains current at full load	100 mA (at 240 VAC)
	230 mA (at 100 VAC)
Frequency	0 / 50 - 60 Hz
Maximum circuit power	23 W

Load Output

Output current	350 / 700 mA
U-OUT$_{max}$ (abnormal)	50 V
Max output power	20 W

I-OUT	350 mA	700 mA
U-OUT	12…43	12…29
λ	86	87
η @ max	85	86

Operating Conditions and Characteristics

Max.temperature at tc point	80 °C
Ambient temperature range	-20…+60 °C
Storage temperature range	-40…+80 °C
Maximum relative humidity	no condensation
Life time	50 000h, at TC max
	(90 % survival rate)

Connections and Mechanical Data

Wire size	0.5 - 1.5 mm^2
Wire type	solid core and fine-stranded
Max. wire length in the total output circuit between (+) & (-)	10 m
Weight	110 g

Conformity & Standards

General and safety requirements	EN 61347-1
Particular safety requirements for d.c. or a.c. supplied electronic controlgear for LED modules, acc. to	EN 61347-2-13
Thermal protection class	EN61347, C5e
Mains current harmonics, acc. to	EN 61000-3-2
Limits for Voltage Fluctuations and Flicker, acc to	EN 61000-3-3
Radio Frequency Interference, acc. to	EN 55015
Immunity standard, acc. to	EN 61547
Performance requirements, acc to	EN 62384

Compliant with relevant EU directives
ENEC, CE & SELV marked

Note: *See page 79 for dimensions, (no.2)*

1x30 W Constant Current LED driver

SELV

30 W 220-240 VAC, 50-60 Hz

- Selectable constant current output: 350 / 500 / 700 mA (fixed)
- Maximum 30 W load
- Short circuit protection
- High efficiency, 0.86
- Optional click-on strain relief for independent use
- External NTC thermal input
- Protected up to 4 kV power network fast transients

Connections

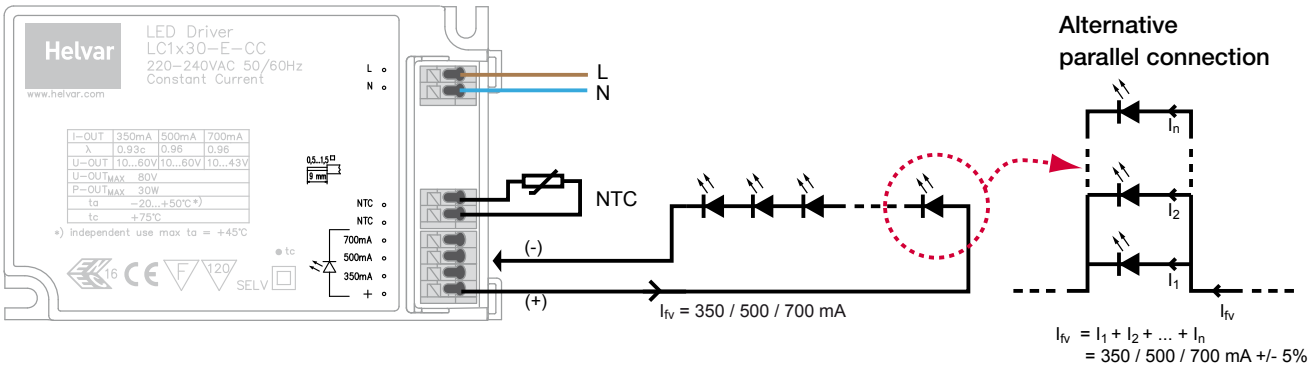

Note: *Not suitable for load side switching operation.*

Mains Characteristics

Voltage range	198 - 264 VAC
DC range	176 - 280 VDC, starting voltage > 190 VDC
Max mains current at full load	0.14-0.18 mA
Frequency	0 / 50 - 60 Hz
U-OUT$_{max}$ (abnormal)	80 V

Load Output

Output current (I-OUT)	350 / 500 / 700 mA
Max output power	30 W
Efficiency, at full load, typical	≥ 0.86

I-OUT	350 mA	500 mA	700 mA
P-out (max)	21 W	30 W	30 W
U-OUT	10 - 60 V	10 - 60 V	10 - 43 V
λ	0.93c	0.96	0.96
η @ max	0.86	0.86	0.86

Operating Conditions and Characteristics

Max.temperature at tc point	75 °C
Ambient temperature range	-20…+50 °C *
	(Independent use $t_{a\,max}$ = +45 °C)*
Storage temperature range	-40…+80 °C
Maximum relative humidity	no condensation
Life time	50 000h, at TC max (90 % survival rate)

Connections and Mechanical Data

Wire size	0.5 - 1.5 mm^2
Wire type	solid core and fine-stranded
Maximum driver to LED wire length	5m (1 m with NTC)
Weight	115 g (+17 g, strain relief LC1x30-SR)
Thermal sensor input	Input for external NTC thermal sensor
NTC trigger point	8.2 kΩ
IP rating	IP20

Conformity & Standards

General and safety requirements	EN 61347-1
Particular safety requirements for d.c. or a.c. supplied electronic controlgear for LED modules, acc. to	EN 61347-2-13
Thermal protection class	EN61347, C5e
Mains current harmonics, acc. to	EN 61000-3-2
Limits for Voltage Fluctuations and Flicker, acc to	EN 61000-3-3
Radio Frequency Interference, acc. to	EN 55015
Immunity standard, acc. to	EN 61547
Performance requirements, acc to	EN 62384

Compliant with relevant EU directives
ENEC, CE & SELV marked

Note: *See page 79 for dimensions, (no. 3 & 4)*

1x30 W Dimmable DALI LED driver

SELV

30 W 220-240 VAC, 50-60 Hz

- Selectable constant current output: 350 / 500 / 700 mA (custom currents on request)
- Maximum 30 W load
- DALI control input, 1 %-100 % dimming range
- Low stand-by power 0.3W
- Protected up to 4 kV power network fast transients
- High efficiency, 0.86
- Optional click-on strain relief for independent use
- External NTC thermal input
- iDim compatible

** (custom currents on request)*

Connections

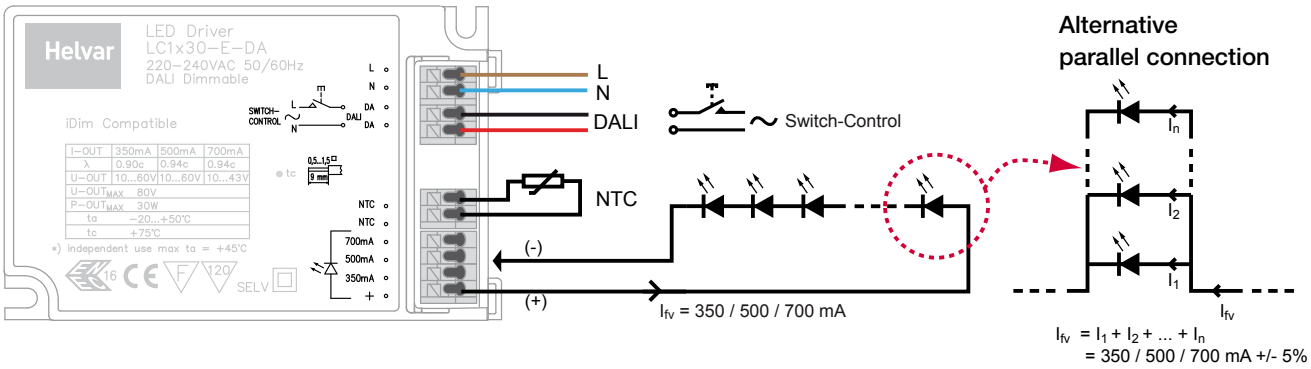

Note: *Not suitable for load side switching operation.*

Mains Characteristics

Voltage range	198 - 264 VAC
DC range	176 - 280 VDC, starting voltage > 190 VDC
Max mains current at full load	0.14-0.18 mA
Frequency	0 / 50 - 60 Hz
U-OUT$_{max}$ (abnormal)	80 V
Stand-by power	0.3 W

Load Output

Output current (I-OUT)	350 / 500 / 700 mA
(custom output currents 245-700 mA on request)	
Max output power	30 W
Efficiency, at full load, typical	≥ 0.86

I-OUT	350 mA	500 mA	700 mA
P-out (max)	21 W	30 W	30 W
U-OUT	10 - 60 V	10 - 60 V	10 - 43 V
λ	0.90c	0.94c	0.94c
η @ max	0.86	0.86	0.86

Operating Conditions and Characteristics

Max.temperature at tc point	75 °C
Ambient temperature range	-20…+50 °C *
	(Independent use $t_{a\,max}$ = +45 °C)*
Storage temperature range	-40…+80 °C
Maximum relative humidity	no condensation
Life time	50 000 h, at TC max (90 % survival rate)

Connections and Mechanical Data

Wire size	0.5 - 1.5 mm^2
Wire type	solid core and fine-stranded
Maximum driver to LED wire length	5m (1 m with NTC)
Weight	123 g (+17 g, strain relief LC1x30-SR)
Thermal sensor input	Input for external NTC thermal sensor
NTC trigger point	8.2 kΩ
IP rating	IP20

Conformity & Standards

General and safety requirements	EN 61347-1
Particular safety requirements for d.c. or a.c. supplied electronic controlgear for LED modules, acc. to	EN 61347-2-13
Thermal protection class	EN61347, C5e
Mains current harmonics, acc. to	EN 61000-3-2
Limits for Voltage Fluctuations and Flicker, acc to	EN 61000-3-3
Radio Frequency Interference, acc. to	EN 55015
Immunity standard, acc. to	EN 61547
Performance requirements, acc to	EN 62384
Digital adressing lighting interface (DALI) *	EN62386-207

Compliant with relevant EU directives
ENEC, CE & SELV marked

** with additional extensions*

Note: *See page 79 for dimensions, (no. 3 & 4)*

7

1x30 W Dimmable 1-10 V LED driver

SELV

30 W 220-240 VAC, 50-60 Hz

- Selectable constant current output: 350 / 500 / 700 mA (custom currents on request)
- Maximum 30 W load
- 1-10 V control input, 1 %-100 % dimming range
- Protected up to 4 kV power network fast transients
- High efficiency, 0.86
- Optional click-on strain relief for independent use
- External NTC thermal input
- MIMO3 and µDim sensor compatible

Connections

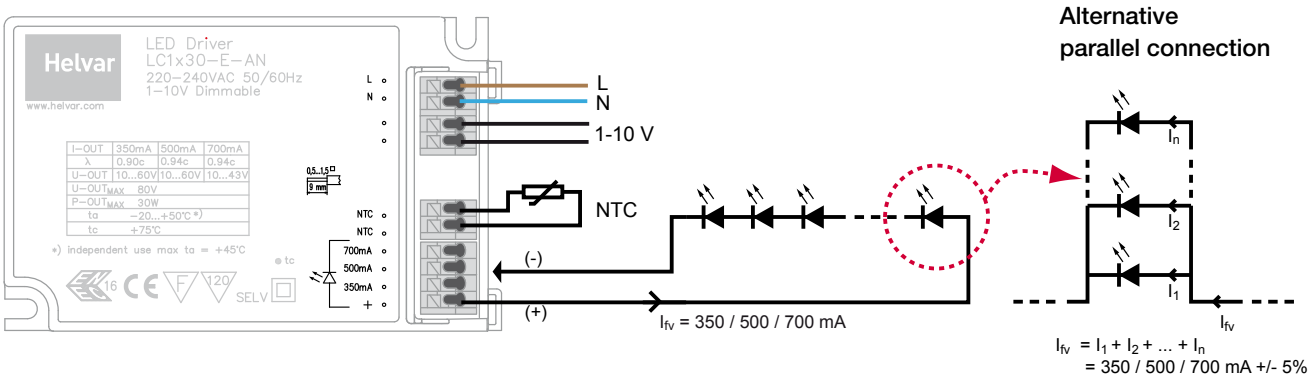

Note: *Not suitable for load side switching operation.*

Mains Characteristics

Voltage range	198 - 264 VAC
DC range	176 - 280 VDC, starting voltage > 190 VDC
Max mains current at full load	0.14-0.18 mA
Frequency	0 / 50 - 60 Hz
U-OUT$_{max}$ (abnormal)	80 V

Load Output

Output current (I-OUT)	350 / 500 / 700 mA
(custom output currents 245-700mA on request)	
Max output power	30 W
Efficiency, at full load, typical	≥ 0.86

I-OUT	350 mA	500 mA	700 mA
U-OUT	10 - 60 V	10 - 60 V	10 - 43 V
λ	0.90c	0.94c	0.94c
η @ max	0.86	0.86	0.86

Operating Conditions and Characteristics

Max.temperature at tc point	75 °C
Ambient temperature range	-20…+50 °C *
	(Independent use $t_{a\,max}$ = +45 °C)*
Storage temperature range	-40…+80 °C
Maximum relative humidity	no condensation
Life time	50 000h, at TC max (90 % survival rate)

Connections and Mechanical Data

Wire size	0.5 - 1.5 mm²
Wire type	solid core and fine-stranded
Maximum driver to LED wire length	5m (1 m with NTC)
Weight	126 g (+17 g, strain relief LC1x30-SR)
Thermal sensor input	Input for external NTC thermal sensor
NTC trigger point	8.2 kΩ
IP rating	IP20

Conformity & Standards

General and safety requirements	EN 61347-1
Particular safety requirements for d.c. or a.c. supplied electronic controlgear for LED modules, acc. to	EN 61347-2-13
Thermal protection class	EN61347, C5e
Mains current harmonics, acc. to	EN 61000-3-2
Limits for Voltage Fluctuations and Flicker, acc to	EN 61000-3-3
Radio Frequency Interference, acc. to	EN 55015
Immunity standard, acc. to	EN 61547
Performance requirements, acc to	EN 62384
1-10 V Control acc. to	EN 60929

Compliant with relevant EU directives
ENEC, CE & SELV marked

Note: *See page 79 for dimensions, (no. 3 & 4)*

1x60 W Constant Current LED driver

SELV

60 W 220-240 VAC, 50-60 Hz

- Selectable constant current output: 350 / 700 / 1400 mA
- Maximum 63 W load
- Short circuit protection
- Open circuit protection
- Protected up to 4 kV power network fast transients
- High efficiency > 0.90
- High power factor, 0.97
- Suitable for outdoor use IP65

Connections

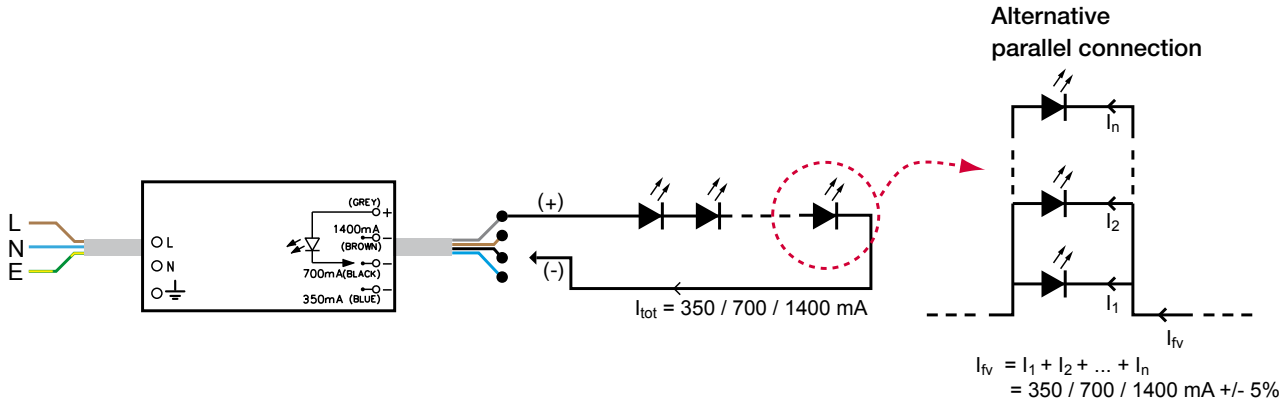

Note: *Not suitable for load side switching operation.*

Mains Characteristics

Voltage range	198 - 264 VAC
Max mains current at full load	0.25 - 0.34 A
Frequency	50 - 60 Hz
U-OUT$_{max}$ (abnormal)	113 V

Load Output

Output current (I-OUT)	350 / 700 / 1400 mA
Max output power	63 W
Efficiency, at full load, typical	0.9

I-OUT	350 mA	700 mA	1400 mA
P-out (max)	31.5 W	63 W	58.8 W
U-OUT	60 - 90 V	35 - 90 V	35 - 42 V
λ	0.94c	0.97	0.98
η @ max	0.86	0.9	0.9

Operating Conditions and Characteristics

Max.temperature at tc point	85 °C
Ambient temperature range	-30…+60 °C
Storage temperature range	-40…+80 °C
Maximum relative humidity	100 %
Life time:	50 000 h, at 75 °C TC
	30 000 h, at 85 °C TC
	(90 % survival rate)

Connections and Mechanical Data

Connection wires length	0.3 m
Maximum driver to LED wire length	5 m
Weight	490 g
IP rating	IP65

Conformity & Standards

General and safety requirements	EN 61347-1
Particular safety requirements for d.c. or a.c. supplied electronic controlgear for LED modules, acc. to	EN 61347-2-13
Thermal protection class	EN61347, C5e
Mains current harmonics, acc. to	EN 61000-3-2
Limits for Voltage Fluctuations and Flicker, acc to	EN 61000-3-3
Radio Frequency Interference, acc. to	EN 55015
Immunity standard, acc. to	EN 61547
Performance requirements, acc to	EN 62384

Compliant with relevant EU directives
ENEC, CE & SELV marked

Note: *See page 79 for dimensions, (no. 6)*

1x100 W Constant Current LED driver

100 W 220-240 VAC, 50-60 Hz

- Selectable constant current output: 700 / 1050 mA
- Maximum 105 W load
- Short circuit protection
- Open circuit protection
- Protected up to 4 kV power network fast transients
- High efficiency > 0.91
- High power factor, 0.98
- Suitable for outdoor use IP65

Connections

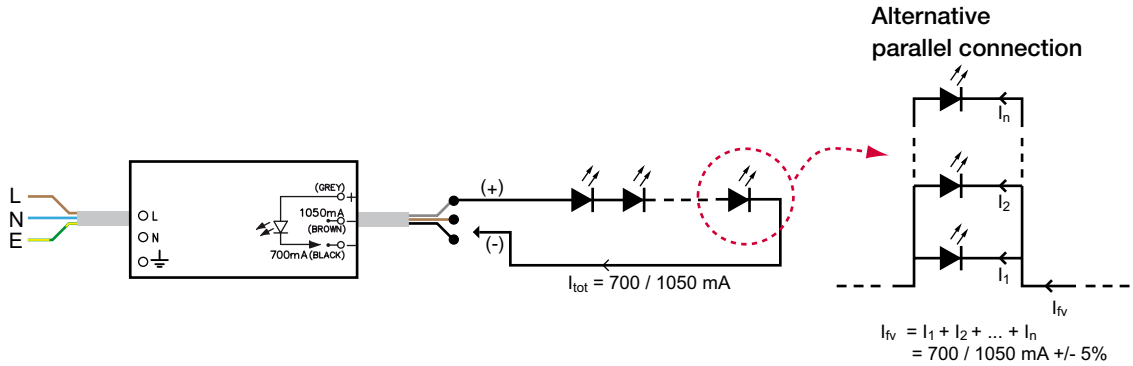

Note: *Not suitable for load side switching operation.*

Mains Characteristics

Voltage range	198 - 264 VAC
Max mains current at full load	0.44 - 0.58 A
Frequency	50 - 60 Hz
U-OUT$_{max}$ (abnormal)	132 V

Load Output

Output current (I-OUT)	700 / 1050 mA
Max output power	105 W
Efficiency, at full load, typical	≥ 0.91

I-OUT	700 mA	1050 W
P-out (max)	84 W	105 W
U-OUT	70 - 120 V	70 - 100 V
λ	0.97	0.98
η @ max	0.91	0.91

Operating Conditions and Characteristics

Max.temperature at tc point	85 °C
Ambient temperature range	-30…+60 °C
Storage temperature range	-40…+80 °C
Maximum relative humidity	100 %
Life time:	50 000 h, at 75 °C TC
	30 000 h, at 85 °C TC
	(90 % survival rate)

Connections and Mechanical Data

Connection wires length	0.3 m
Maximum driver to LED wire length	5 m
Weight	750 g
IP rating	IP65

Conformity & Standards

General and safety requirements	EN 61347-1
Particular safety requirements for d.c. or a.c. supplied electronic controlgear for LED modules, acc. to	EN 61347-2-13
Thermal protection class	EN61347, C5e
Mains current harmonics, acc. to	EN 61000-3-2
Limits for Voltage Fluctuations and Flicker, acc to	EN 61000-3-3
Radio Frequency Interference, acc. to	EN 55015
Immunity standard, acc. to	EN 61547
Performance requirements, acc to	EN 62384

Compliant with relevant EU directives
ENEC, CE & SELV marked

Note: *See page 79 for dimensions, (no. 7)*

1x100 W Constant Current LED driver

100 W 220-240 VAC, 50-60 Hz

- Selectable constant current output: 1400 / 2100 mA
- Maximum 101 W load
- Short circuit protection
- Open circuit protection
- Protected up to 4 kV power network fast transients
- High efficiency > 0.91
- High power factor, 0.97
- Suitable for outdoor use IP65

Connections

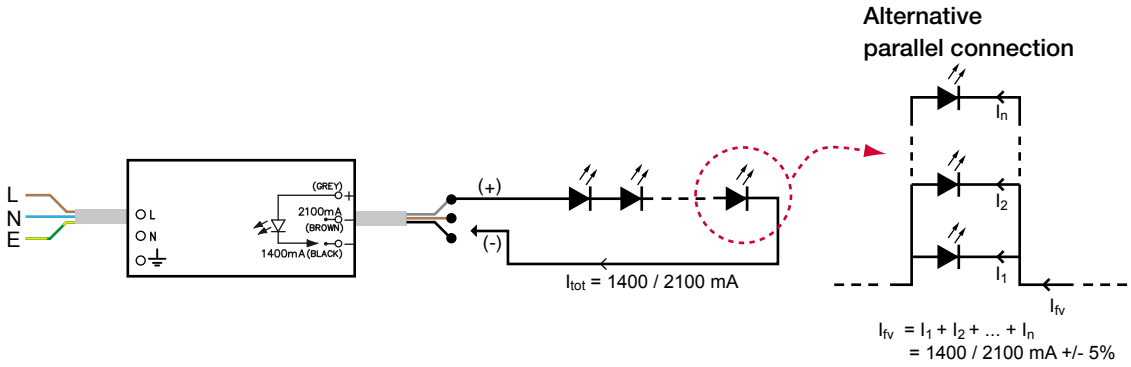

Note: *Not suitable for load side switching operation.*

Mains Characteristics

Voltage range	198 - 264 VAC
Max mains current at full load	0.44 - 0.58 A
Frequency	50 - 60 Hz
U-OUT$_{max}$ (abnormal)	79 V

Load Output

Output current (I-OUT)	1400 / 2100 mA
Max output power	101 W
Efficiency, at full load, typical	≥ 0.91

I-OUT	1400 mA	2100 mA
P-out (max)	101 W	101 W
U-OUT	30 - 72 V	30 - 48 V
λ	0.97	0.97
η @ max	0.91	0.90

Operating Conditions and Characteristics

Max.temperature at tc point	85 °C
Ambient temperature range	-30…+60 °C
Storage temperature range	-40…+80 °C
Maximum relative humidity	100 %
Life time:	50 000 h, at 75 °C TC
	30 000 h, at 85 °C TC
	(90 % survival rate)

Connections and Mechanical Data

Connection wires length	0.3 m
Maximum driver to LED wire length	5 m
Weight	750 g
IP rating	IP65

Conformity & Standards

General and safety requirements	EN 61347-1
Particular safety requirements for d.c. or a.c. supplied electronic controlgear for LED modules, acc. to	EN 61347-2-13
Thermal protection class	EN61347, C5e
Mains current harmonics, acc. to	EN 61000-3-2
Limits for Voltage Fluctuations and Flicker, acc to	EN 61000-3-3
Radio Frequency Interference, acc. to	EN 55015
Immunity standard, acc. to	EN 61547
Performance requirements, acc to	EN 62384

Compliant with relevant EU directives
ENEC, CE & SELV marked

Note: *See page 79 for dimensions, (no. 7)*

3 channel DMX LED driver 50 W

SELV

50 W, 220 - 240 V, 50-60 Hz

- Max. total output power 50 W
- Smooth dimming range 0.1 % - 100 %
- Default output current 350 mA
- Programmable output current (200 – 1050 mA)
- Programmable DMX512 start address
- Optional DMX programming dongle (LC50-PR)
- High efficiency 0.89 (at full load, 230 VAC)
- High power factor > 0.9c (at full load, 230 VAC)

Connections

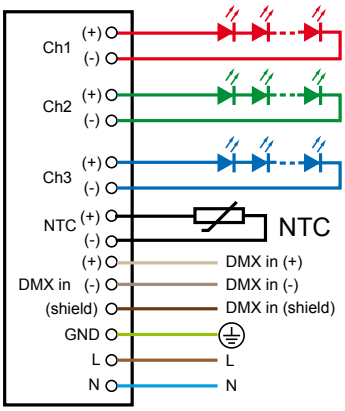

Note: *Not suitable for load side switching operation.*

Mains Characteristics

Voltage range	120 - 277 VAC
Max mains current at full load	0.30 - 0.50 A
Frequency	50 / 60 Hz
U-OUT$_{max}$ (abnormal)	60 V

Load Output

Output current (default)	350 mA
Output current range (programmable)	200-1050 mA

Max. total output power	50 W
Max. individual channel power	50 W
Efficiency, at full load, typical	0.89

I-OUT	350 mA	200 - 1050 mA
P-out (max)	50 W	50 W
U-OUT	10 - 55 V	10 - 55 V
λ	> 0.9c	> 0.9c
η @ max	0.89	0.89

Operating Conditions and Characteristics

Max.temperature at tc point	85 °C
Ambient temperature range	-20…+50 °C
Storage temperature range	-40…+80 °C
Maximum relative humidity	no condensation
Life time	30 000 h, at tc max. (90 % survival rate)

Connections and Mechanical Data

Wire size	0.5 - 1.5 mm^2
Maximum driver to LED wire length	5 m
Weight	350 g
IP rating	20

Conformity & Standards

General and safety requirements	EN 61347-1
Particular safety requirements for d.c. or a.c. supplied electronic controlgear for LED modules, acc. to	EN 61347-2-13
Thermal protection class	EN61347, C5e
Mains current harmonics, acc. to	EN 61000-3-2
Radio Frequency Interference, acc. to	EN 55015
Immunity standard, acc. to	EN 61547
Performance requirements, acc to	EN 62384

Compliant with relevant EU directives
CE, UL pending, VDE & ENEC pending, SELV

Optional

USB to DMX programming dongle LC50-PR

Note: *See page 79 for dimensions, (no. 5)*

Dimensions

1

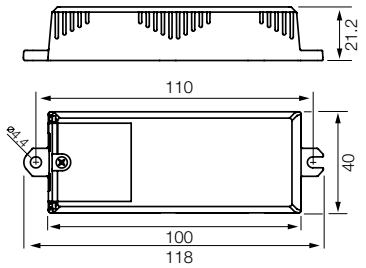

2

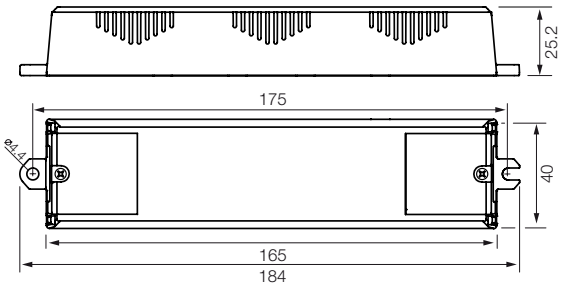

3

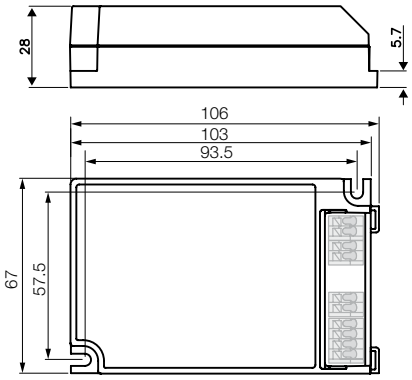

4

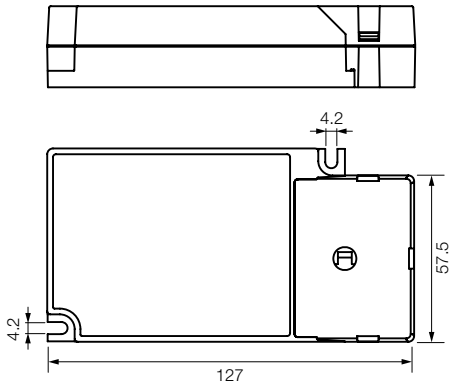

5

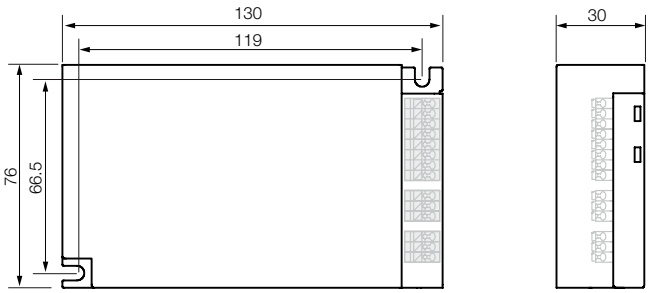

6

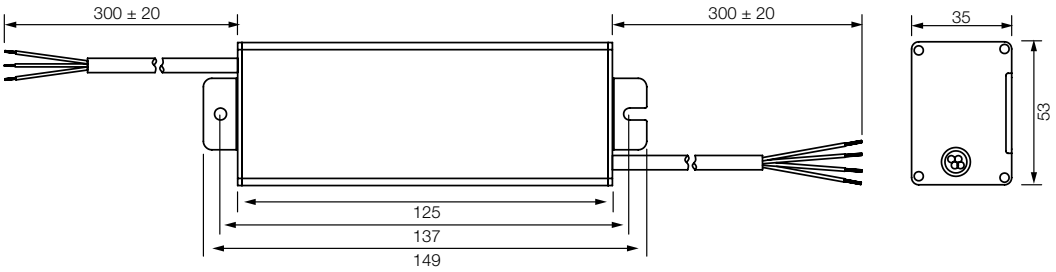

7

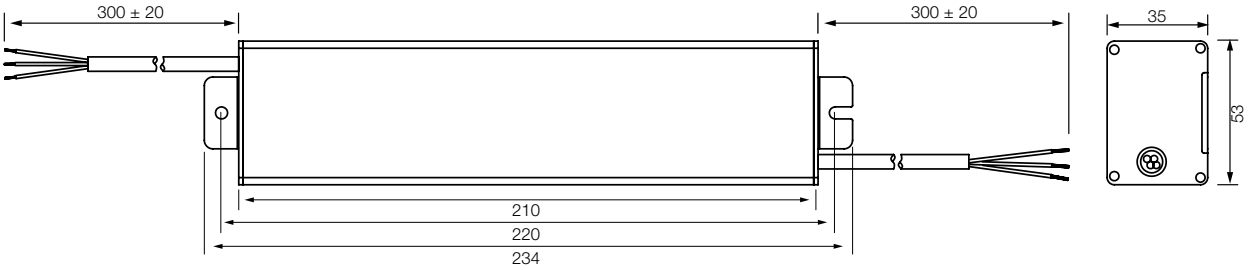

1	LL6-U-CC
2	LL20-U-CC
3	LC1x30-E-CC, LC1x30-E-DA, LC1x30-E-AN
4	LC1x30-E-CC, LC1x30-E-DA, LC1x30-E-AN (+ LC1x30-SR)
5	LC50-U-DX3

6	OL1x60-E-CC
7	OL1x100-E-CC1, OL1x100-E-CC2

Instructions for use - electronic ballasts for fluorescent lamps

Helvar ballast and ignitors are designed to be built into luminaires. Safe and reliable operation of the components requires that the luminaire complies with the relevant standards and regulations (e.g. IEC 60598-1). The luminaire shall be designed to adequately protect the control gear from dust, moisture and pollution.
The luminaire manufacturer remains responsible for the correct choice and installation of the control gear according to the application. Specifications of the control gear shall not be exceeded when it is used in the luminaire in the actual operating conditions. The ballast shall not be used outside the luminaire.

Wiring considerations

Wire type
- Solid core conductor only

Wire cross section dimensions
- 0.5 - 1.5 mm² (EL-s-u 0.5 - 0.75 mm²)

Wiring insulation
- According to recommendations in EN 60598

Maximum wire lengths
- See Characteristics table

Wire connections
- As shown on the ballast label and the Wiring Diagram datasheets

Wire preparation
- Strip length 7.5 mm ± 1 mm

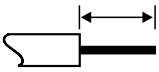

Wiring capacitance
- 80 pF / metre (max. for adviced wire lengths)

Wire insertion force
- 8 Newtons (typical)

Wire release from ballast
(See detailed release instructions on page 88)

Wiring layout
- Keep all wiring as short as possible (particularly the 'Hot' wires - see Wiring Diagrams datasheets)
- 'Hot' wires should be of equal length
- 'Cold' wires should be of equal length
- Always run mains wiring, lamp wiring and low voltage control wiring separate from each other
- Do not run hot and cold lamp wires bunched together
- Lamp wires of two or more separate ballast should not be run together

Installation & operational considerations

Ballast earthing
- EL-s, EL-ngn and EL-TCs ranges are in principle suitable for both Class I & II fittings (no earth required). However EMC and temperatures should be checked case by case.
- All other Helvar electronic ballasts require a functional earth to be connected to ensure reliable operation

Maximum t_c temperature
- Reliable operation and lifetime is only guaranteed if the maximum t_c point temperature is not exceeded under the conditions of use

Frequent switching
- Helvar warm start ballasts may be used in conjunction with occupancy sensors (PIR) as long as the 'on' period is greater than 20 minutes. Shorter switching period may reduce lamp life

Master / Slave connection
- Not advised

Switching off one lamp via lamp wires
- Not permitted

Starting aid
- For a reliable lamp ignition the use of metal starting aid is recommended
- For reliable starting (and electrical safety) all metal parts of the fitting must be at the same electrical potential as the ballast case

Reflector position
- Situating a reflector or metal plate very close to the lamp may increase RFI emissions and cause excessive leakage current of the fitting
- See lamp standards for recommendations

Fitting components
- Ensure the correct electrical ratings for the lamps being used (e.g. 500V rated lampholders are required for T5 lamps)

Ballast mounting position
- Ensure that the entire length of the ballast is against a flat surface to ensure good heat dissipation

Instructions for use - electronic ballasts for fluorescent lamps

Installation & operational considerations

Class II luminaires:

Helvar electronic ballasts can be used in suitably designed class II luminaires. The following points must be very carefully noted:

- EL-sc and EL-iDim / EL-iDim-c ballasts must have functional earth connected
- Luminaire standard EN 60598 provides full details of the requirements for class II luminaires
- Starting aid may be required for reliable operating and EMC performance

Lamp "burn in":

Brand new lamps may occasionally have an uneven distribution of internal gases. This can lead to unreliable starting or uneven light distribution from the lamp. Helvar recommend that new lamps are operated at full output ("burnt in") for a number of hours prior to being dimmed.

DALI controls:

The DALI standard only currently governs ballast compatibility. For other units, like sensors and control devices, the compatibility assurance is in process. Until the standard for these is finalised, the total system compatibility must be ensured at the system design stage.

Stand-by function

The stand-by function is designed specifically as a protection for the ballast. It will switch the lamps off when an 'end of lifetime' condition occurs. Lamps can also fail in many other ways. As such, the exact operating state of the ballast under other lamp fault conditions depends on the specific failure. The ballast will not be harmed under any normal lamp failure condition. Ballasts can be reset from stand-by either by switching the mains supply off and then on, or by replacing the faulty lamps.

Lamp 'end of lifetime'

- Behaviour of the ballast at end of lamp life time: IEC 61347-2-3 17.2.
- If the lamp electrical characteristics (e.g. lamp voltage) exceed the ballast internal preset values, the ballast will recognise that a lamp/s has reached the end of its useful operational life. The ballast will then switch off the supply to the lamps to prevent unnecessary stress to the circuit.

Emergency inverter units

Due to our continuing program of product development and improvement, Helvar ballast designs are evolving constantly. This natural evolution may affect compatibility between our electronic ballasts and emergency conversion modules. It is therefore the responsibility of either the fitting manufacturer, emergency unit supplier and/or system integrator to ensure the used combination is fully compatible.

Emergency inverter unit recommendations

- Use a 4 pole changeover device, with all 4 poles being used to disconnect the lamp.
- Disconnect the mains supply from the ballast before disconnecting the emergency lamp, and prior to the lamps connection to the emergency unit.
- Reconnect the emergency lamp to the ballast before applying the mains supply.
- For multiple lamp ballasts, the wiring lengths for emergency and non-emergency lamps should be equal.

Site considerations

Insulation resistance testing on an installation

- Carry out insulation resistance testing with the fittings disconnected from the mains supply (the fitting has already been tested by the manufacturer)
- If fittings are connected to the mains supply during an insulation resistance test, all Live phases and Neutral must be connected together before the test is carried out.
- Ensure correct re-connection before the mains supply is re-applied.

Mixed technology on the same electrical circuit

- Do not mix magnetic and electronic ballasts on the same electrical circuit. The energy spikes from magnetic ballasts may damage electronic ballasts.

Infra-red (IR) system

- Fluorescent lamps emit not only visible light, but also infra-red light. In some cases this may cause interference to IR systems. To minimise problems the IR system should have a reduced receiving area. To guarantee successful functionality the manufacturer of the IR system should be contacted prior to installation. Helvar ballasts typically operate at frequencies rarely used in IR applications.

3-phase supplies

- Do not apply power to the ballast / fitting without the Neutral conductor connected.
- Do not disconnect the Neutral conductor unless the supply is off.

Miniature Circuit Breakers (Please refer page 84.)

- 'Type C' MCB's with trip characteristics in according to EN 60898 are recommended.
- 'Type B' MCB's are not recommended due to their sensitivity. If used, load only to 60% of the equivalent 'Type C' MCB.

Instructions for use - magnetic ballasts & ignitors

Helvar ballast and ignitors are designed to be built into luminaires. Safe and reliable operation of the components requires that the luminaire complies with the relevant standards and regulations (e.g. IEC 60598-1). The luminaire shall be designed to adequately protect the control gear from dust, moisture and pollution.
The luminaire manufacturer remains responsible for the correct choice and installation of the control gear according to the application. Specifications of the control gear shall not be exceeded when it is used in the luminaire in the actual operating conditions. The ballast shall not be used outside the luminaire.

Wiring considerations

1. Fluorescent and HID lamp ballasts

Wire type
- **Push in terminals:** Solid core conductor only
- **Screw terminals:** Solid core or stranded conductor

Wiring insulation
- According to recommendations in EN 60598

Wire cross section dimensions
- **Push in terminals:** 0.5 - 1.0 mm²
  (0.5 - 1.5 mm² for HID lamp ballasts)
- **Screw terminals:** 1.5 - 3.0 mm²

Wire preparation
- **Push in terminals:** Strip length 8.0 - 9.0 mm

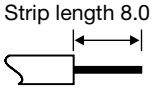

- **Screw terminals:** Strip length 7.0 mm ± 1 mm

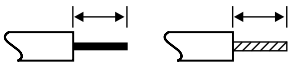

Wire connections
- As shown on the ballast label and the Wiring Diagram datasheets

Mineral insulated cable
- Not advised

Wire release from ballast
- **Push in terminals:** Use a 1 mm² solid pin (or similar)
- **Screw terminals:** Flat blade screwdriver

More detailed release instructions on page 88

Wiring layout
- Keep all wiring as short as possible
- Mains wiring and lamp should always be kept as far as possible from each-other
- Mains wiring should not be bunched together with lamp wiring
- Avoid wiring 'loops' (to minimise magnetic coupling effect)
- Avoid long parallel cable runs

2. Ignitors for HID lamps

Wire type
- Solid core or stranded conductor

Wiring insulation
- According to recommendations in EN 60598

Wire cross section dimensions
- 1.5 - 3.0 mm² or 2.0 - 4.0 mm² (depending upon ignitor type)
- 2.5 - 5.0 mm² (1000 W ignitors)

Wire connections
- As shown on the ignitor label and datasheet

Mineral insulated cable
- Not advised

Wire preparation
- Strip length 7.0 mm ± 1 mm

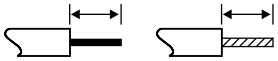

Wire release from ignitor
- Flat blade screwdriver

Wiring layout
- Keep wiring from the ignitor to the lamp as short as possible

Instructions for use - magnetic ballasts & ignitors

Installation & operational considerations

Ballast earthing
- Required for safety

Lifetime
- Reliable operation and lifetime is only guaranteed if the maximum winding temperature of tw 130 ºC is not exceeded under the conditions of normal use

Ballast mounting
- The ballast must be located in such a position as to ensure that its maximum winding temperature of tw 130 ºC is not exceeded under the conditions of normal use
- Mount the ballast against a flat surface to ensure good heat dissipation

Starting aid
- For reliable starting (and electrical safety) all metal parts of the fitting must be at the same electrical potential as the ballast case

Fitting components
- Ensure the correct electrical ratings for the lamps being used

Ignitor choice
- Helvar ballasts for Metal Halide or High Pressure Sodium lamps are only suitable for use with superimposed pulse type ignitors
- Pulsar type ignitors (where a high starting voltage is applied to the ballast windings) are not suitable for Helvar ballasts. If used, the ballast winding insulation will be subjected to increased load. This will drastically shorten the ballast lifetime

Reflector position
- Situating a reflector or metal plate very close to the lamp may increase RFI emissions and cause excessive leakage current of the fitting

Protection against lamp rectification
- Metal Halide & High-Pressure Sodium lamps can begin to rectify as they reach the end of their operational lifetime. This can cause excessive temperature in a fitting. As such, it is recommended that thermal protection be fitted in these luminaires
- A thermal protection device should be fitted inside the luminaire
- Helvar ballasts for Metal Halide & High-Pressure Sodium lamps are available also with internal thermal protectors (P-types)
- Use of ignitors with a timer facility also provide some protection against lamprectification. Use in conjunction with a thermal protector

Noise avoidance
- Ensure the ballast is securely fixed within the luminaire
- Fix the ballast at a minimum distance of 3mm from the side of the fitting
- Ensure that the fitting is of rigid construction (especially at the point where the ballast is fitted)
- In large fittings the ballast should be separated from the fitting by mounting it on an aluminium plate (approx. 2 mm thick)
- Mount as few ballasts as possible in one fitting
- If using multiple ballasts in a fitting, ensure that the ballasts are mounted as far as possible from each other

Site considerations

Mixed technology on the same electrical circuit
- Magnetic and electronic ballasts should not be connected to the same electrical circuit. The energy spikes produced by magnetic ballasts may result in damage to the electronic ballasts

Miniature Circuit Breakers
- 'Type C' MCB's having trip characteristics in accordance with EN 60898 are recommended.
- 'Type B' MCB's are not recommended due to their sensitivity. If used, they must only be loaded to 60% of the equivalent 'Type C' MCB

Quantity of ballasts for miniature circuit breakers (MCB's)

Type C MCB's are strongly recommended to use with fluorescent lighting.

- Other types can prove unsuitable due to their tripping properties.

- Practical quantities will depend strongly on the reactance of the actual circuit.

Conversion table for other types of Miniature Circuit Breaker	
MCB type	**Relative quantity of ballasts**
B 10 A	37 %
B 16 A	60 %
B 20 A	75 %
C 10 A	62 %
C 16 A	100 % (see tables)
C 20 A	125 %

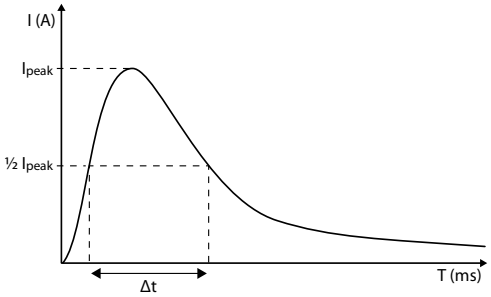

EL-s, EL-su

Lamp(s)	EL-s	EL-su	Quantity of ballasts per miniature circuit breaker 16 A Type C		Typical inrush current	1/2 value time	Calculated energy
			Based on I_{Cont}	Based on I_{peak}	I_{peak} (A)	Δt (µs)	$I_{peak}^2\Delta t$ (A^2s)
1 x 14 W T5	**EL1x14-35s**	**EL1x14-35s-u**	166	122	17	69	0.16
2 x 14 W T5	**EL2x14-35s**	**EL2x14-35s-u**	83	47	34	149	1.30
3 x 14 W T5	**EL3/4x14s**	**EL3/4x14s-u**	56	47	34	149	1.30
4 x 14 W T5	**EL3/4x14s**	**EL3/4x14s-u**	42	42	34	149	1.30
1 x 21 W T5	**EL1x14-35s**	**EL1x14-35s-u**	112	47	34	149	1.30
2 x 21 W T5	**EL2x14-35s**	**EL2x14-35s-u**	57	47	34	149	1.30
1 x 28 W T5	**EL1x14-35s**	**EL1x14-35s-u**	86	47	34	149	1.30
2 x 28 W T5	**EL2x14-35s**	**EL2x14-35s-u**	43	43	34	149	1.30
1 x 35 W T5	**EL1x14-35s**	**EL1x14-35s-u**	68	47	34	149	1.30
2 x 35 W T5	**EL2x14-35s**	**EL2x14-35s-u**	34	34	34	149	1.30
1 x 24 W T5	**EL1x24s**	-	103	103	17	69	0.16
2 x 24 W T5	**EL2x24s**	-	53	53	17	69	0.16
3 x 24 W T5	-	**EL3/4x24s-u**	35	32	47	165	2.67
4 x 24 W T5	-	**EL3/4x24s-u**	27	27	47	165	2.67
1 x 39 W T5	**EL1x39/36s**	-	61	61	17	69	0.16
2 x 39 W T5	**EL2x39/36s**	-	32	32	34	149	1.30
1 x 49 W T5	**EL1x49s**	**EL1x49s-u**	49	47	34	149	1.30
2 x 49 W T5	**EL2x49s**	**EL2x49s-u**	25	25	47	172	2.77
1 x 54 W T5	**EL1x54**	-	44	44	34	149	1.30
2 x 54 W T5	**EL2x54**	-	22	22	47	165	2.67
1 x 80 W T5	**EL1x80s**	-	30	30	34	149	1.30
2 x 80 W T5	-	**EL2x80s-u**	15	15	67	231	6.74
1 x 18 W T8	**EL1x18s**	-	143	122	17	69	0.16
2 x 18 W T8	**EL2x18s**	-	75	75	17	69	0.16
3 x 18 W T8	**EL3/4x18s**	**EL3/4x18s-u**	50	47	34	149	1.30
4 x 18 W T8	**EL3/4x18s**	**EL3/4x18s-u**	37	37	34	149	1.30
1 x 36 W T8	**EL1x36/40/18s**	**EL1x36/40s-u**	74	74	17	69	0.16
2 x 36 W T8	**EL2x36/40s**	**EL2x36/40s-u**	37	37	34	149	1.30
1 x 58 W T8	**EL1x58s**	**EL1x58s-u**	48	47	34	149	1.30
2 x 58 W T8	**EL2x58s**	**EL2x58s-u**	24	24	47	165	2.67
1 x 70 W T8	**EL1x70s**	-	40	40	34	149	1.30
2 x 70 W T8	**EL2x70s**	-	20	20	49	180	3.17

EL-ngn

Lamp(s)	EL-ngn	Quantity of ballasts per miniature circuit breaker 16 A Type C		Typical inrush current	1/2 value time	Calculated energy
		Based on I_{Cont}	Based on I_{peak}	I_{peak} (A)	Δt (µs)	$I_{peak}^2\Delta t$ (A^2s)
1 x 18 W T8	**EL1x18ngn**	136	74	23	131	0.51
2 x 18 W T8	**EL2x18ngn**	70	70	22	132	0.48
4 x 18 W T8	**EL4x18ngn**	36	36	37	193	2.00
1 x 36 W T8	**EL1x36ngn**	72	71	24	134	0.57
2 x 36 W T8	**EL2x36ngn**	37	37	30	152	0.90
1 x 58 W T8	**EL1x58ngn**	47	47	23	128	0.52
2 x 58 W T8	**EL2x58ngn**	24	24	50	136	2.59

Quantity of ballasts for miniature circuit breakers (MCB's)

EL-TCs

Lamp(s)	EL1/2x-TCs	EL1x-TCs	Quantity of ballasts per miniature circuit breaker 16 A Type C		Typical inrush current	1/2 value time	Calculated energy
			Based on I_{Cont}	Based on I_{peak}	I_{peak} (A)	Δt (µs)	$I_{peak}^2 \Delta t$ (A^2s)
1 x 9 W TC-SE	**1/2x9-13TCs**	**1x9-13TCs**	229	34	41	182	0.23
1 x 10 W TC-DE	**1/2x9-13TCs**	**1x9-13TCs**	224	34	41	182	0.23
1 x 10 W TC-DD	**1/2x9-13TCs**	**1x9-13TCs**	215	34	41	182	0.23
1 x 11 W TC-SE	**1/2x9-13TCs**	**1x9-13TCs**	167	34	41	182	0.23
1 x 13 W TC-DE/TE	**1/2x9-13TCs**	**1x9-13TCs**	160	34	41	182	0.23
1 x 16 W TC-DD	**1/2x9-13TCs**	**1x9-13TCs**	160	34	41	182	0.23
2 x 9 W TC-SE	**1/2x9-13TCs**	**1x9-13TCs**	129	34	41	182	0.23
2 x 10 W TC-DE	**1/2x9-13TCs**	**1x9-13TCs**	120	34	41	182	0.23
2 x 11 W TC-SE	**1/2x9-13TCs**	**1x9-13TCs**	90	34	41	182	0.23
2 x 13 W TC-DE/TE	**1/2x9-13TCs**	**1x9-13TCs**	84	34	41	182	0.23
1 x 18 W TC-DE/TE	**1/2x18TCs**	**1x18TCs**	127	35	41	181	0.22
2 x 18 W TC-DE/TE	**1/2x18TCs**	**1x18TCs**	67	35	41	181	0.22
1 x 21 W TC-DD	**1/2x18TCs**	**1x18TCs**	102	35	41	181	0.22
1 x 18 W TC-L/F	**1/2x18-42TCs**	**1x18-42TCs**	147	33	40	192	0.23
1 x 24 W TC-L/F	**1/2x18-42TCs**	**1x18-42TCs**	96	33	40	192	0.23
1 x 26 W TC-DE/TE	**1/2x18-42TCs**	**1x18-42TCs**	88	33	40	192	0.23
1 x 32 W TC-TE	**1/2x18-42TCs**	**1x18-42TCs**	75	33	40	192	0.23
1 x 42 W TC-TE	**1/2x18-42TCs**	**1x18-42TCs**	55	33	40	192	0.23
1 x 22 W TC-T5c	**1/2x18-42TCs**	**1x18-42TCs**	96	33	40	192	0.23
1 x 40 W TC-T5c	**1/2x18-42TCs**	**1x18-42TCs**	59	33	40	192	0.23
2 x 18 W TC-L/F	**1/2x18-42TCs**	**1x18-42TCs**	68	33	40	192	0.23
2 x 24 W TC-L/F	**1/2x18-42TCs**	**1x18-42TCs**	46	33	40	192	0.23
2 x 26 W TC-DE/TE	**1/2x18-42TCs**	**1x18-42TCs**	42	33	40	192	0.23
2 x 26 W TC-DE/TE	**2x32/42TCs**	-	45	33	42	184	0.24
2 x 32 W TC-TE	**2x32/42TCs**	-	38	33	42	184	0.24
2 x 42 W TC-TE	**2x32/42TCs**	-	28	28	42	184	0.24
22 + 40 W TC-T5c	**2x32/42TCs**	-	38	33	42	184	0.24
40 + 40 W TC-T5c	**2x32/42TCs**	-	32	32	42	184	0.24
1x14W PL-R	**1/2x14-17TCs**	**1x14-17TCs**	133	33	41	190	0.25
2x14W PL-R	**1/2x14-17TCs**	**1x14-17TCs**	76	33	41	190	0.25
1x17W PL-R	**1/2x14-17TCs**	**1x14-17TCs**	110	33	41	190	0.25
2x17W PL-R	**1/2x14-17TCs**	**1x14-17TCs**	60	33	41	190	0.25
1x36TC-L	**1/2x36/38TCs**	-	63	33	42	184	0.24
2x36TC-L	**1/2x36/38TCs**	-	33	33	42	184	0.24
1x38TC-DD	**1/2x36/38TCs**	-	62	33	42	184	0.24
2x38TC-DD	**1/2x36/38TCs**	-	32	32	42	184	0.24

Quantity of ballasts for miniature circuit breakers (MCB's)

EL-iDim

Lamp(s)	iDim	Quantity of ballasts per miniature circuit breaker 16 A Type C		Typical inrush current	1/2 value time	Calculated energy
		Based on I_{Cont}	Based on I_{peak}	I_{peak} (A)	Δt (µs)	I_{peak}^2Δt (A^2s)
1x14 T5	**EL 1x14-35iDim**	152	46	35	144,0	0,13
2x14 T5	**EL 2x14-35iDim**	79	38	38	173,0	0,18
4x14 T5	**EL 4x14iDim**	42	42	35	141,0	0,13
1x21 T5	**EL 1x14-35iDim**	110	46	35	144,0	0,13
2x21 T5	**EL 2x14-35iDim**	56	38	38	173,0	0,18
1x24 T5, TC-L	**EL 1x24iDim**	101	57	30	123,0	0,08
2x24 T5, TC-L	**EL 2x24iDim**	51	45	37	130,0	0,13
1x28 T5	**EL 1x14-35iDim**	81	46	35	144,0	0,13
2x28 T5	**EL 2x14-35iDim**	42	38	38	173,0	0,18
1x35 T5	**EL 1x14-35iDim**	66	46	35	144,0	0,13
2x35 T5	**EL 2x14-35iDim**	34	34	38	173,0	0,18
1x36 T8, TC-L	**EL 1x36iDim**	73	45	37	130,0	0,13
2x36 T8, TC-L	**EL 2x36iDim**	37	34	44	165,0	0,23
1x39 T5	**EL 1x39iDim**	61	45	37	130,0	0,13
2x39 T5	**EL 2x39iDim**	31	31	44	165,0	0,23
1x49 T5	**EL 1x49iDim**	47	45	37	130,0	0,13
2x49 T5	**EL 2x49iDim**	24	24	49	200,0	0,36
1x54 T5	**EL 1x54iDim**	44	44	37	130,0	0,13
2x54 T5	**EL 2x54iDim**	22	22	49	200,0	0,36
1x55 T5, TC-L	**EL 1x55iDim**	43	43	37	130,0	0,13
2x55 T5, TC-L	**EL 2x55iDim**	22	22	49	200,0	0,36
1x80 T5, TC-L	**EL 1x80iDim**	30	26	49	200,0	0,36
3x14 T5	**EL3x14iDim**	54	48	34	141,0	0,12
2x80 T5, TC-L	**EL2x80iDim**	16	12	49	323,0	0,46

EL-iDim-c

Lamp(s)	iDim-c	Quantity of ballasts per miniature circuit breaker 16 A Type C		Typical inrush current	1/2 value time	Calculated energy
		Based on I_{Cont}	Based on I_{peak}	I_{peak} (A)	Δt (µs)	I_{peak}^2Δt (A^2s)
1x18W TC-DE/TE	**1/2x18iDim-c**	119	56	26	171,0	0,08
2x18W TC-DE/TE	**1/2x18iDim-c**	63	56	26	171,0	0,08
1x18W TC-L/F	**1/2x18/24iDim-c**	107	56	26	171,0	0,08
1x24W TC-L/F	**1/2x18/24iDim-c**	82	56	26	171,0	0,08
1x22W TC-T5c	**1/2x18/24iDim-c**	82	56	26	171,0	0,08
1x40 W TC-T5c	**1/2x18/24iDim-c**	57	56	26	171,0	0,08
2x18W TC-L/F	**1/2x18/24iDim-c**	67	56	26	171,0	0,08
2x24W TC-L/F	**1/2x18/24iDim-c**	47	47	26	171,0	0,08
1x26W TC-DE/TE	**1/2x26-42iDim-c**	82	56	26	171,0	0,08
1x32W TC-TE	**1/2x26-42iDim-c**	67	56	26	171,0	0,08
1x42W TC-TE	**1/2x26-42iDim-c**	54	54	26	171,0	0,08
2x26W TC-DE/TE	**1/2x26-42iDim-c**	43	43	26	171,0	0,08
2x26W TC-DE/TE	**2x26-42iDim-c**	47	26	49	200,0	0,36
2x32W TC-TE	**2x26-42iDim-c**	37	26	49	200,0	0,36
2x42W TC-TE	**2x26-42iDim-c**	28	26	49	200,0	0,36

Quantity of ballasts for miniature circuit breakers (MCB's)

EL-sc

Lamp(s)	EL-sc	Quantity of ballasts per miniature circuit breaker 16 A Type C		Typical inrush current	1/2 value time	Calculated energy
		Based on I_{Cont}	Based on I_{peak}	I_{peak} (A)	Δt (µs)	I_{peak}^2Δt (A^2s)
1 x 14 W T5	**EL1x14sc**	152	86	25	49	0.26
2 x 14 W T5	**EL2x14sc**	83	71	31	44	0.35
4 x 14 W T5	**EL4x14sc**	42	42	31	44	0.35
1 x 21 W T5	**EL1x21sc**	107	86	25	49	0.26
2 x 21 W T5	**EL2x21sc**	56	56	31	44	0.35
1 x 24 W T5	**EL1x24sc**	99	86	25	49	0.26
2 x 24 W T5	**EL2x24sc**	52	52	31	44	0.35
1 x 28 W T5	**EL1x28sc**	83	83	25	49	0.26
2 x 28 W T5	**EL2x28sc**	40	40	31	44	0.35
1 x 35 W T5	**EL1x35sc**	66	66	31	44	0.35
2 x 35 W T5	**EL2x35sc**	33	33	47	149	2.43
1 x 39 W T5	**EL1x39sc**	61	61	31	44	0.35
2 x 39 W T5	**EL2x39sc**	31	31	47	149	2.43
1 x 49 W T5	**EL1x49sc**	48	48	31	44	0.35
2 x 49 W T5	**EL2x49sc**	24	24	47	205	3.37
1 x 54 W T5	**EL1x54sc**	43	43	31	44	0.35
2 x 54 W T5	**EL2x54sc**	22	22	47	205	3.37
1 x 80 W T5	**EL1x80sc**	29	27	47	205	3.37
1 x 18 W T8	**EL1x18sc**	136	86	25	49	0.26
2 x 18 W T8	**EL2x18sc**	70	70	31	44	0.35
4 x 18 W T8	**EL4x18sc**	36	34	47	149	2.43
1 x 24 W TCL	**EL1x24sc**	99	86	25	49	0.26
2 x 24 W TCL	**EL2x24sc**	52	52	31	44	0.35
1 x 36 W T8/TCL	**EL1x36sc**	70	70	31	44	0.35
2 x 36 W T8/TCL	**EL2x36sc**	36	34	47	149	2.43
1 x 58 W T8	**EL1x58sc**	47	47	31	44	0.35
2 x 58 W T8	**EL2x58sc**	24	24	47	205	3.37
1 x 70 W T8	**EL1x70sc**	40	34	47	149	2.43
1 x 55 W TCL	**EL1x55sc**	42	42	31	44	0.35
2 x 55 W TCL	**EL2x55sc**	22	22	47	205	3.37
1 x 80 W TCL	**EL1x80sc**	29	27	47	205	3.37

EP-h

Lamp(s)	EP-h	Quantity of ballasts per miniature circuit breaker 16 A Type C		Typical inrush current	1/2 value time	Calculated energy
		Based on I_{Cont}	Based on I_{peak}	I_{peak} (A)	Δt (µs)	I_{peak}^2Δt (A^2s)
1x20 HI	**EP1x20h**	104	75	22	135.0	0.05
1x35 HI	**EP1x35h**	58	52	32	137.0	0.10
1x70 HI	**EP1x70h**	32	32	41	188.0	0,22

Quantity of LED control gear for miniature circuit breakers (MCB's)

	Quantity of drivers per miniature circuit breaker 16 A Type C		Typical inrush current	1/2 value time	Calculated energy
	Based on I_{Cont}	Based on I_{peak}	I_{peak} (A)	Δt (µs)	I_{peak}^2Δt (A^2s)
LL1x6-U-CC	220	220	2.5	45	0.0003
LL1x20-U-CC	100	100	7.6	25	0.001
LC1x30-E-CC	74	74	6.2	25	0.000901
LC1x30-E-DA	73	73	6.7	26.4	0.0011
LC1x30-E-AN	73	73	7	27	0.0011
OL1x60-E-CC	39	18	50	270	0.3736
OL1x100-E-CC1	20	13	26	610	0.29240
OL1x100-E-CC2	19	12	25	690	0.28890

Wire release instructions

These instructions provide details of how to remove wires from the terminals of Helvar ballasts without damaging the terminals.
Ensure mains supply is switched off before attempting any wire removal.

Electronic Ballasts

quick release vertical push-in terminals

Use a blunt tool (example shown) to push down gently on the built in push button.

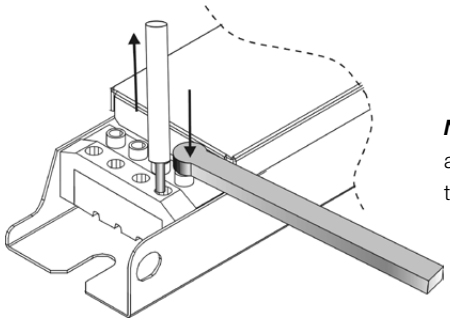

Note: Removal using a solid pin is not advised since permanent damage to the connector may occur.

IDC & horizontal push-in terminals)

Gently twist and pull wire at the same time

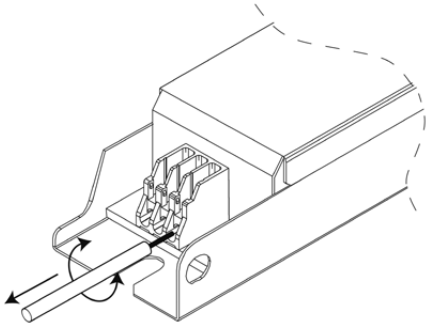

Note: Wire removal from insulation piercing contact is only possible with force.

EL-ngn

Use a 1 mm² solid pin (or similar) or gently twist and pull wire at the same time

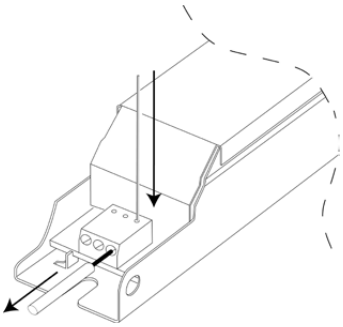

EP-h

Use a Use a flat blade screwdriver (example shown) to push down gently on the built in push button.

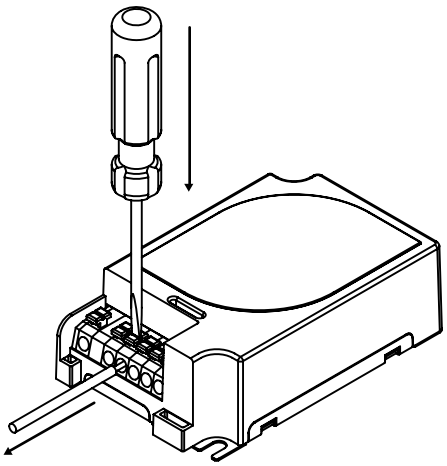

Magnetic Ballasts

… with push in terminals

Use a 1 mm² solid pin (or similar)

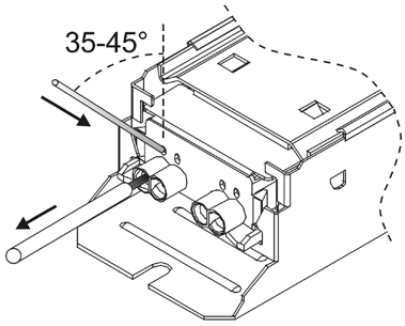

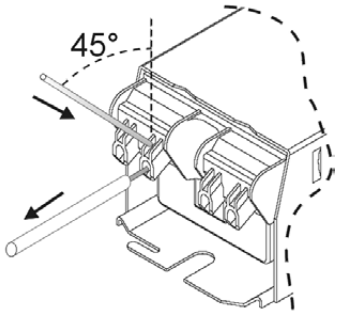

… NK/E...SE & L26S types

Use a flat blade screwdriver

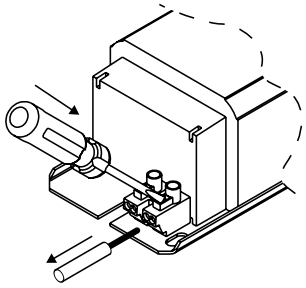

… with screw terminals

Use a flat blade screwdriver

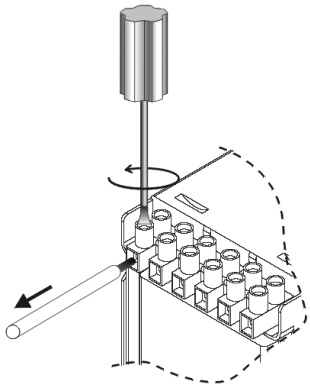

8

EL-s wiring options

Standard connection

(shown on product label)

All new EL2x..s
(Except EL2x14-35s & EL2x49s)

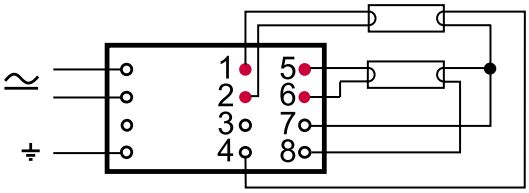

EL2x14-35s & EL2x49s

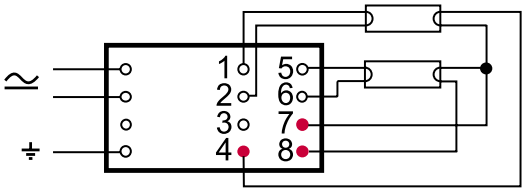

Option (6 wires)

All new EL2x..s
(Except EL2x14-35s & EL2x49s)

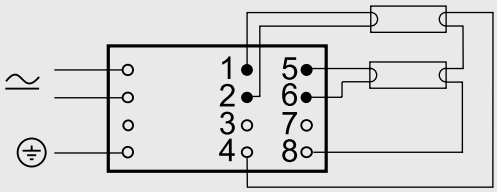

EL2x14-35s & EL2x49s

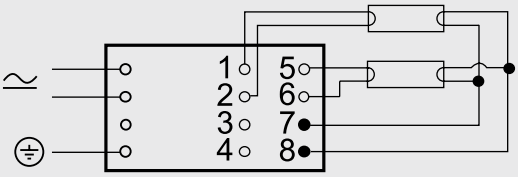

Option (8 wires)

All new EL2x..s
(T5, T8 & TC-L)

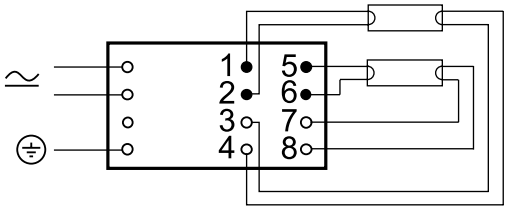

Connection equal to previous ballast-lamp wiring for T5 and TC-L.

Note: *T8 not compatible with previous EL-HF connection.*

8

Markings of lamp types

	Marking	Cap	Sylvania	Osram	Philips	Thorn	Tungsram	GE
Fluorescent lamps								
	T26 (T8)	G13	F	L	TL	F		F
	T16 (T5)	G5	F	L	TL	F		F
Compact fluorescent lamps								
	TC-S	G23	LYNX-S	Dulux S	PL-S	-	FD	Biax™ S
	TC-SE	2 G 7	LYNX-SE	Dulux SE	PL-S	-	FD/E	Biax™ SE
	TC - D	G 24 d	LYNX-D	Dulux D	PL-C	-	FD-D	Biax™ D
	TC-DE	G 24 q	LYNX-DE	Dulux D/E	PL-C	-	FD-D/E	Biax™ D/E
	TC-T	GX 24 d	LYNX-T	Dulux T	PL-T	-	-	Biax™ T
	TC-TE	GX 24 q	LYNX-TE	Dulux T/E	PL-T	-	-	Biax™ T/E,QE
	TC-L	2 G 11	LYNX-L,-LE	Dulux L	PL-L	2L	FD-L	Biax™ L
	TC-DD	GR8,GR10q	-	-	-	2D	-	Biax™ 2D™
	T-R,28/30,T9	G 10 q	FC	FC	TL-E	-	-	Circline®
	T-R,16,T5	2GX13	FC	FC	TL 5 C	-	-	-
	TC-F	2 G 10	LYNX-F	Dulux F	-	-	-	-
High pressure mercury lamps								
	HME	E27, E 40	HSL	HQL	HPL	MBF	HqLI	HqLI
	HMG	E27	-	HQL-B	HPL-B	-	-	-
	HMR	E27, E40	HSR-BW	HQL-R	HPL-R	MBFR	-	MBFR
High pressure sodium lamps								
	HST	E 27, E40	SHP-T	NAV-T	SON-T	SON-T	TCF	SON-T
	HSE	E 27, E40	SHP-E	NAV-E	SON	SON-E	TCL	SON-E
	HSE-I	E 27, E40	SHP/I	NAV-E	SON	-	-	Lucalox I
	HST-DE	R 7 S, Fc 2	-	NAV-TS	-	SON-TD	-	SON-TD
Substitutive high pressure sodium lamps								
	HSE-X	E27, E 40	SHX	NAV-E	SON-H	-	-	SON-Classique
Metal halide lamps								
	HIT	G 12	HIS-T	HQI-T	MHN-T (PG12)	MBI-T/ BOH	-	MBI-T
	HIT	E 40	HIS-T	HQI-T	HPI-TD	MQI-T	HqMIF	MBIF
	HIT-DE	R 7 S, Fc 2	HIS-TD	HQI-TS	MHN-TD HPI-TD	MBIL	HqMIS	MQI
	HIT-I	E40	-	HQI-T	HPI-BUS	-	-	MBI-T
	HIE	E27, E 40	M (E27)	HQI-E	HPI	MBI	HqMIL	MBI
	HIR	E40	-	HQI-R	-	-	HqMIR	-

Sensors

Helvar offer a range of sensors, for luminaire mounting or standalone use. The sensors provide additional energy savings to Helvar electronic controllable ballasts, as well as automatic lighting control.

	Features					
	Motion Detector	Constant Light	Bright Out	IR Receiver	Dimming	Relay Output
iDim Sense 316	●	●	-	●	●	-
Minisensor3	●	●	-	●	●	-
MIMO2	-	●	-	-	●	-
MIMO3	-	●	-	-	●	-
µDim SS-PIR-SW	●	-	●	●	-	●
µDim SS-PIR-AN	●	●	-	●	●	●
µDim SL-MW-SW	●	-	●	●	-	●
µDim SL-MW-AN	●	●	-	●	●	●
µDim SL-MW-DA	●	●	-	●	●	●
DIGIDIM 312	●	●	-	●	●	-

iDim - Easy intelligence in luminaires

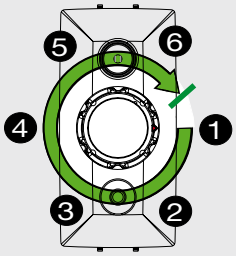

1) Classroom
2) Single office
3) Open plan office
4) Corridor link
5) Corridor hold
6) Meeting room

Please refer iDim user guide for detailed description of the iDim modes.

The luminaire based iDim concept provides 6 out-of-box application modes that are easy to select just by rotating the Mode Selector on the iDim Sense. The modes are designed to fulfil the needs for easy-to-use, energy saving lighting control. The basic functions are pre-programmed and are fully adjustable to meet all requirements.

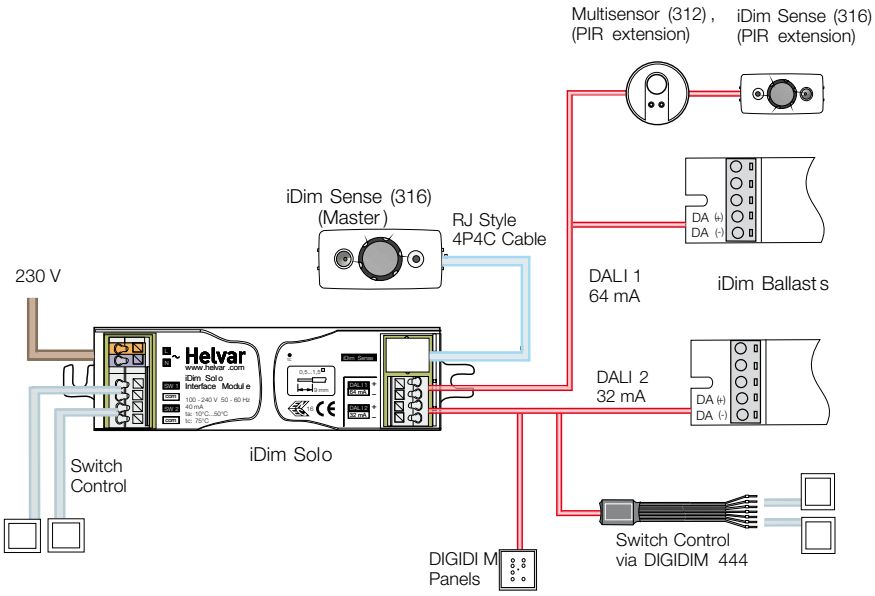

iDim Sense (316)

iDim Sense without Fascia

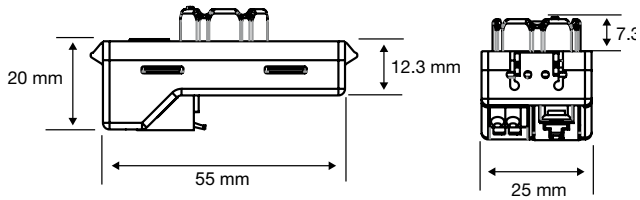

iDim Sense with Fascia

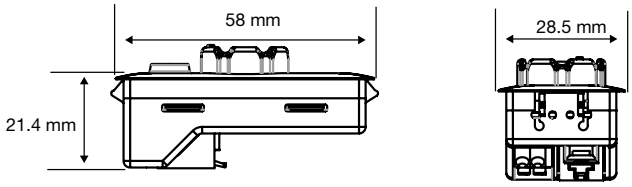

Luminaire mounted, weight 15 g

Connections

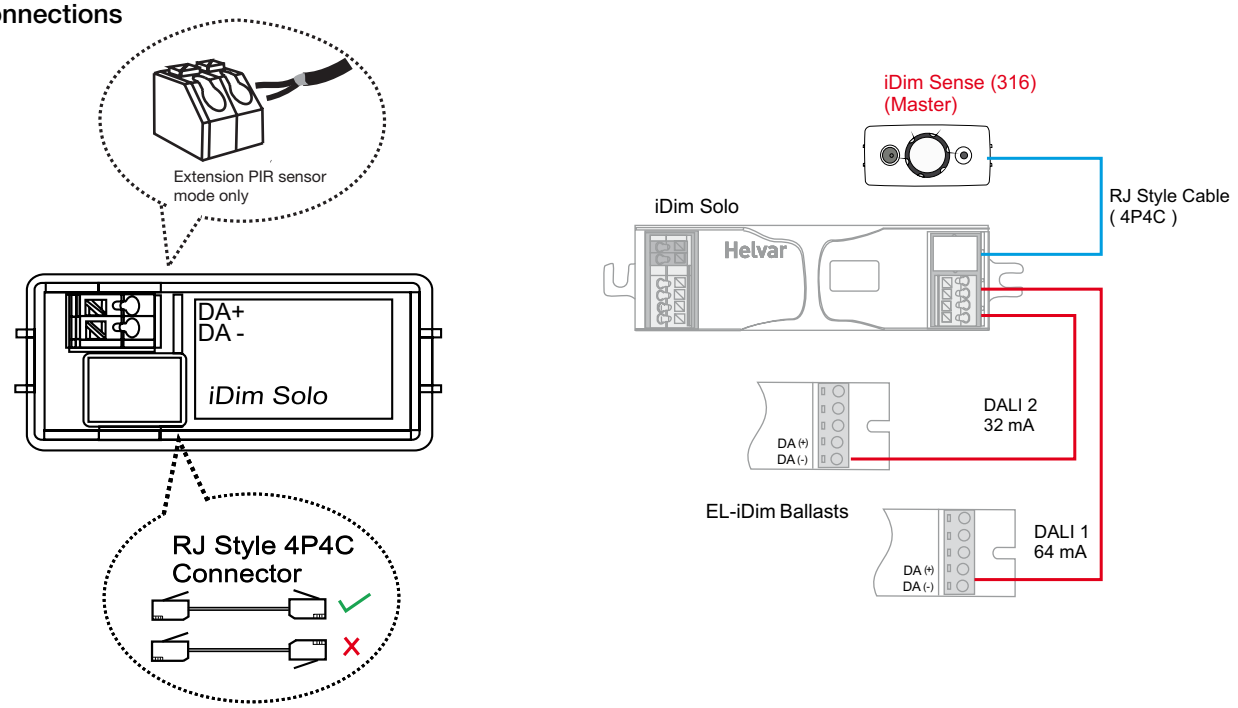

Introduction

The iDim Sense is a luminaire based DALI sensor. It combines a movement detector (PIR), remote control receiver (IR) and photocell (CL) in one enclosure. The manual mode selector allows the user to easily select one of the 6 out-of-box application modes. The 316 is also able to act as an extension PIR sensor, connected to the DALI bus of the iDim Solo.

Key Features

- PIR, Constant Light and Infrared control
- Easy to select application modes
- Clip-on fascia in different colours
- Clip-on PIR Restrictor
- Mode selector with LED feedback

Technical Data

DALI consumption:	10 mA
Ambient temperature:	10 …50 °C
Relative humidity:	90 % maximum, non-condensing
Storage temperature:	-25 °C … 75 °C
Constant light reception area:	60°, 3 m mounting height
PIR detection area:	85°, 3 m mounting height (Clip-on PIR Restrictor exluded)

iDim Solo (403)

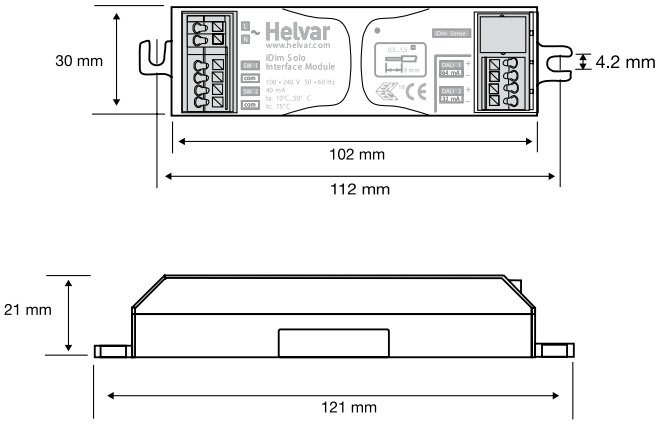

Luminaire mounted, weight 40 g

Connections

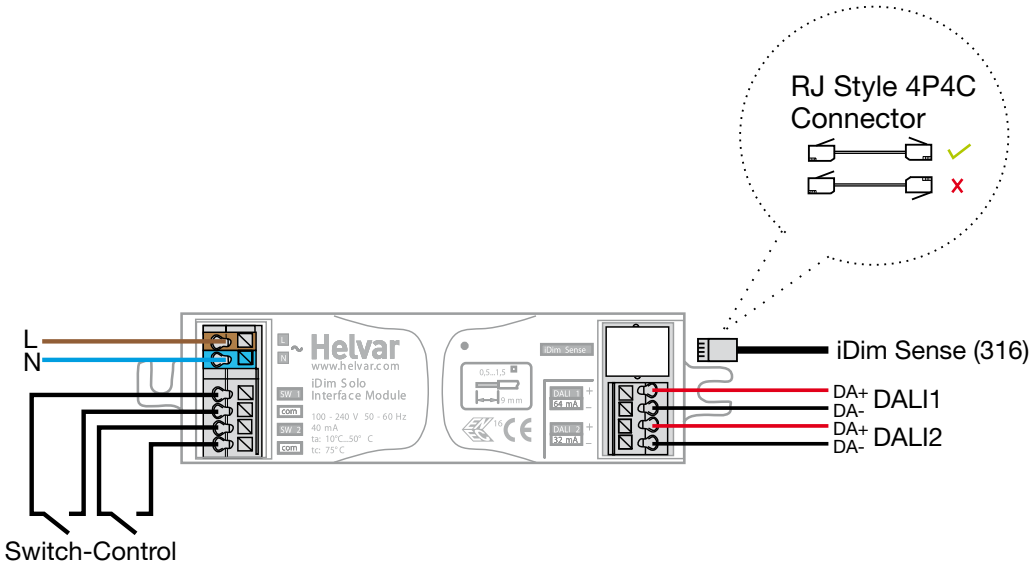

Introduction

The iDim Solo is used as an interface module to connect the iDim Sense (316 Standalone) and iDim ballasts as well as user interfaces. Additionally, the iDim Solo can be used as a DALI power supply unit (PSU). The unit is housed in a standard ballast-style enclosure (30 mm width x 21 mm height) making it fast and easy to assemble.

Key Features

- Power capability: 64 mA (DALI 1), 32 mA (DALI 2) or 96 mA when operating in parallel
- 2 x DALI outputs
- 2 x Switch control inputs
- iDim Sense connection (RJ style, 4P4C)
- Mains connection

Technical Data

Mains Supply:	100 - 240 VAC, 50 - 60 Hz (nom.)
	85 - 264 VAC, 45 - 65 Hz (absolute)
Protection:	Internally resettable fuse (PTC)
2 x DALI outputs:	DALI 1: 64 mA
	DALI 2: 32 mA
Ambient temperature:	10…50 °C
Relative humidity:	90 % max, non-condensing
Storage temperature:	-25 °C…+75 °C

iDim Remote (304)

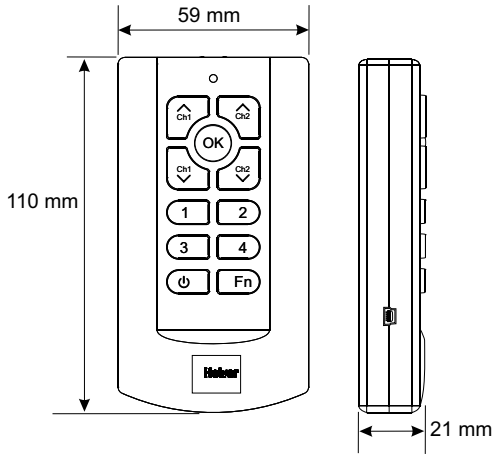

Non-flammable polycarbonate, halogen free., weight 40 g

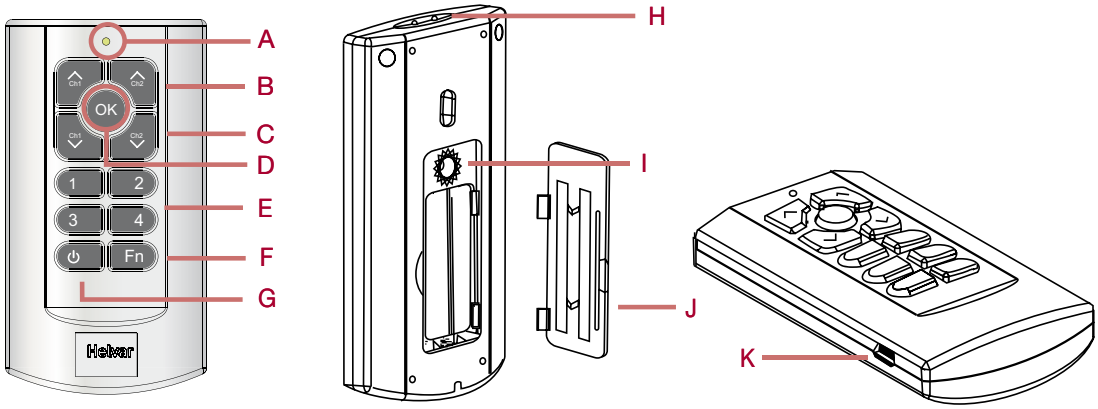

A.	*LED indicator (Flashes when comms transfer is in progress and when buttons pressed)*	*D.*	*OK key*	*H.*	*Transmitter*
B.	*Up modifier*	*E.*	*1 - 4 Scene Recall /Configuration*	*I.*	*Mode selector button*
C.	*Down modifier*	*F.*	*Function key (Fn)*	*J.*	*Battery cover*
		G.	*Lights off ( )*	*K.*	*USB connection (Mini B)*

Introduction

The Infra-red iDim remote control allows the user to control, modify and configure standalone lighting applications fitted with a 316 iDim Sense. This hand held unit is fitted with eleven buttons that control basic functions such as raising and lowering the general light level and selecting four pre-set scenes and off.

Pressing certain button combinations together allow basic programming functionality. These include modifying pre-set levels and running test sequences.

Additional Features

- Mountable wall bracket / desk stand included
- Connects to PC for advanced lighting setup via USB cable

Technical Data

Power Supply:	2 x AAA (LR03) 1.5 V Batteries
Operating range:	Approx. 10 m
Operating frequency:	36 kHz
Ambient Temperature:	0 to 40 °C
Relative Humidity:	90 % max, non-condensing
Storage Temperature:	-10 °C to +70 °C

Minisensor3

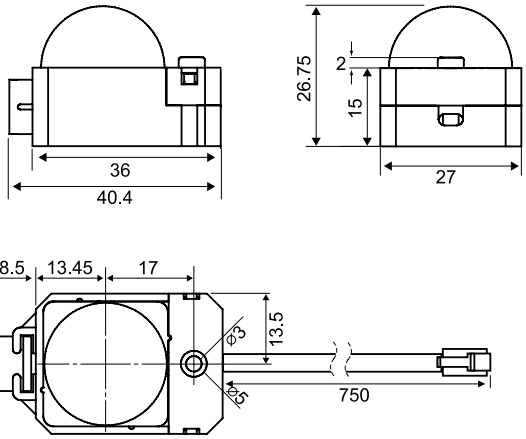

Luminaire mounted

Connections

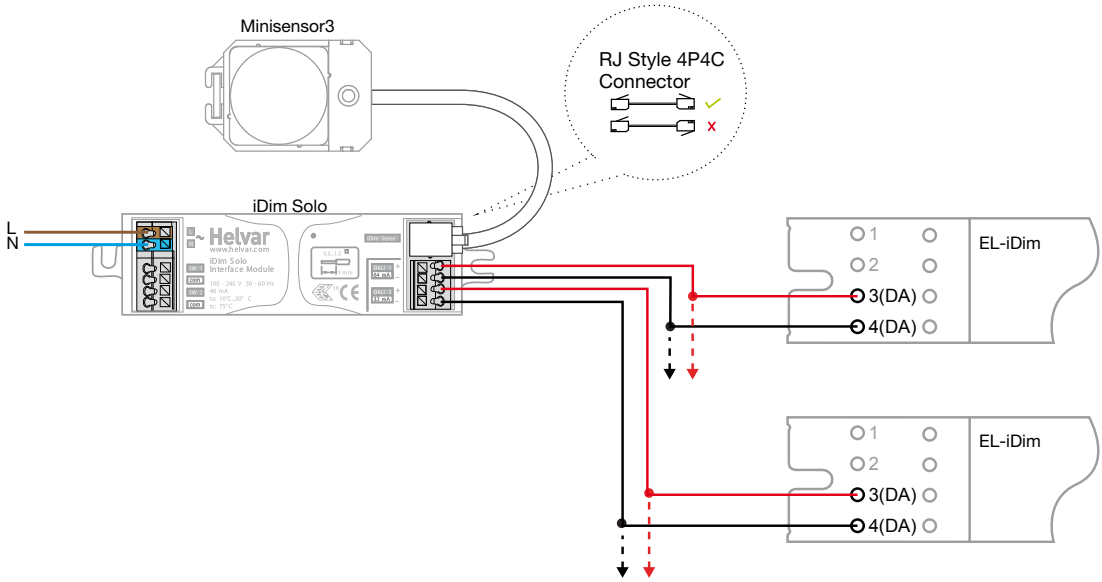

Introduction

The Helvar Minisensor3 is a two channel luminaire-mounted component containing three integrated sensors:

- Presence detector (PIR)
- Constant light sensor
- Infrared (IR) receiver.

Key Features

- 4 operating modes, configured with 303 IR-remote
  1) Automatic PIR
  2) PIR with manual switch ON / automatic OFF
  3) PIR with constant light function
  4) PIR with manual switch ON / automatic OFF, with the constant light function
- Small and compact size

Technical Data

Supply:	from iDim Solo
Ambient temperature:	0 …50 °C
Relative humidity:	90 % maximum, non-condensing
Storage temperature:	-10 °C … 70 °C
Constant light reception area:	100°, 3 m mounting height
PIR detection area:	4.5 m (mounting height 3.0m)
IP rating	21
Electric strength	1.5 kV

MIMO2 constant light sensor

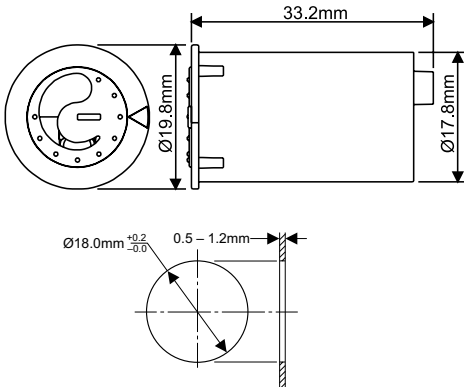

Luminaire mounted (with flush mounting bracket)

Connections

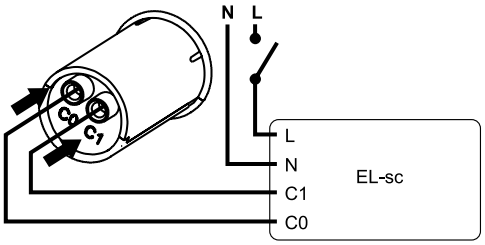

Setup

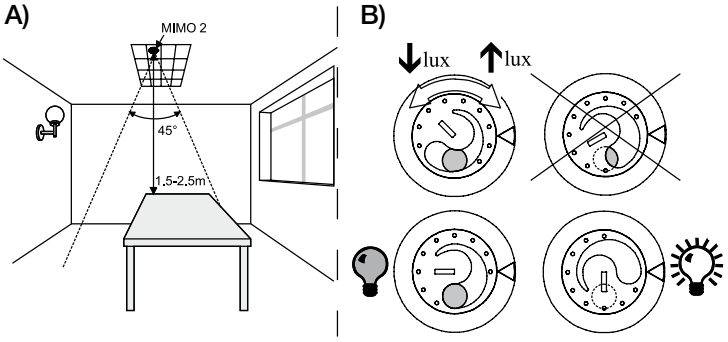

Note: Take care when adjusting the rotary disc, as it is able to rotate freely through 360°. For example, when adjusting for a darker light level, turning the disc too far anticlockwise will result in a brighter setting (see figure B).

Introduction

MIMO2 is a cylindrical light sensor that can be fitted into a luminaire casing. MIMO2 offers simple, automatic daylight control of fluorescent luminaires achieving maximum energy savings in offices, schools, factories, airports and shopping centres.

Key Features

- Easy installation into the luminaire
- Simple setting of the constant light level
- Start up at full level
- Controls up to 15 Helvar electronic ballasts
- Supply voltage derived from the ballast
- Response delay (hysterisis) approximately 2 minutes
- Compatible with all Helvar 1-10 V ballasts / drivers

Technical Data

Control voltage	1-10 VDC (EN60929)
Ambient temperature:	0 …55 °C
Relative humidity:	80 % maximum, non-condensing
Storage temperature:	-40 °C … 70 °C
Measuring Range	200 ... 600 Lux at sensor set 2 m above
IP rating	20

MIMO3 energy saving sensor

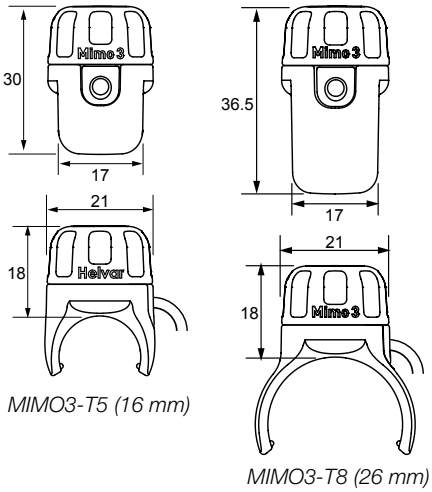

MIMO3-T5 (16 mm)

MIMO3-T8 (26 mm)

MIMO3 panel mounting

Connections

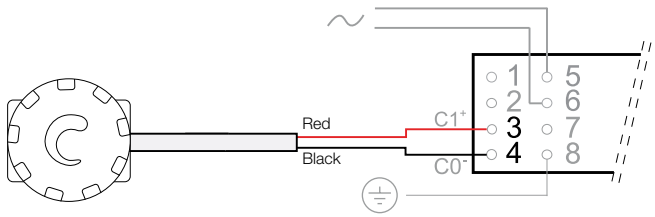

MIMO3 connection to EL-sc / CHFC3 ballast

Setup

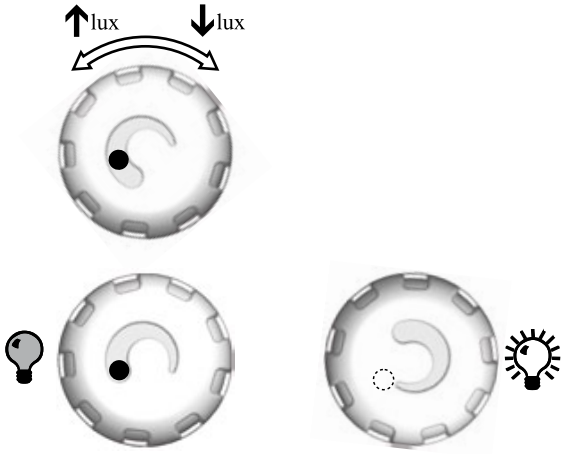

Adjust the rotary top shell to set the desired light level

Introduction

MIMO3 is a very small light sensor that enables simple, automatic constant light control. It can be used with any Helvar 1-10 V controllable ballast or driver. MIMO3 can be mounted directly to the fluorescent lamps, or panel mounted in the luminaire casing.

Key features

- Easy installation into the luminaire casing or fluorescent lamp
- Simple setting of the constant light level
- Start up at full level
- Controls up to 15 Helvar electronic ballasts
- Supply voltage derived from the ballast
- Smooth dimming operation, 1.5 minute settling time
- Compatible with Helvar EL-sc ballasts

Technical Data

Control voltage	1-10 VDC (EN60929)
Ambient temperature:	5 …55 °C
Relative humidity:	80 % maximum, non-condensing
Storage temperature:	-40 °C … 70 °C
Control Range	200 to 600 lux +/- 50 lux
Viewing angle	45° average, 42-52° depending on aperture
IP rating	20

Note: Pre-assembled with T5 clip. T8 clip and panel flange also included in package

µDim PIR Switching Sensor

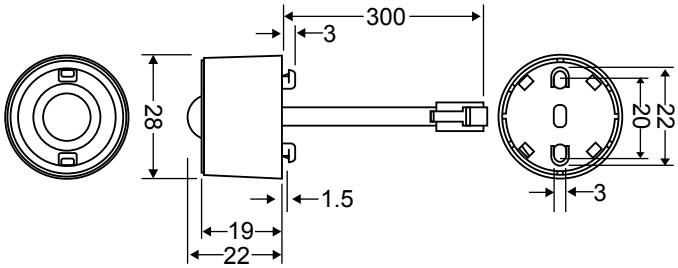

Connections

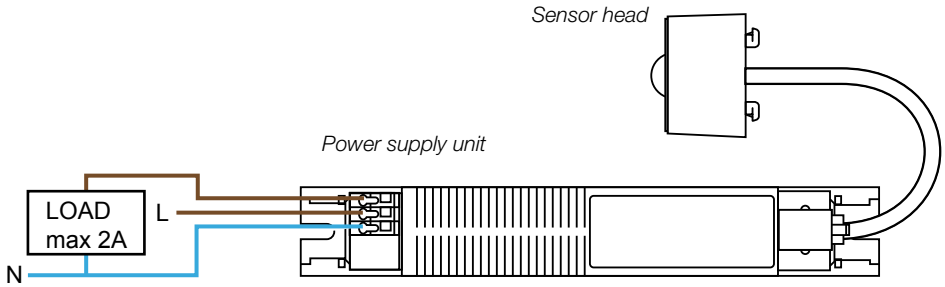

Introduction

The SL-PIR-SW presence detector provides automatic control of lighting loads with optional manual control. The miniature size makes it ideally suited for mounting in luminaires to provide local control of individual fittings. The unit detects movement using a PIR sensor and turns the load on. When an area is no longer occupied the load will switch off after an adjustable time out period.

Key Features

- Time delay function
- Switching with lux level sensing
- Programmable using optional IR handset (p. 104)

Technical Data

Supply voltage	220 - 240 V AC, 50 Hz
Max load capacity	2 A, INC, ELV, FL, and CFL
Light level	200 – 900 Lux
Ambient temperature:	-10 …35 °C
PIR detection area:	5 m (mounting height 2.8m)
Type	Class II

Please see page 104 for more information

µDim PIR 1-10 V Sensor

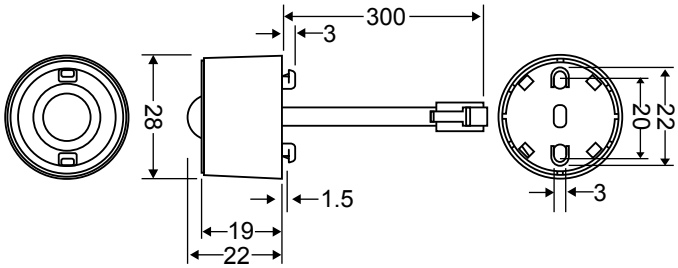

Connections

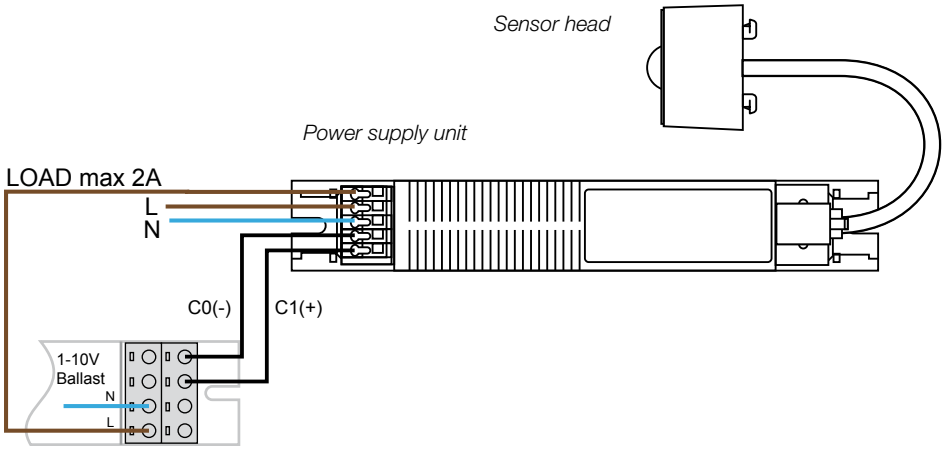

Introduction

The SL-PIR-AN presence detector provides automatic control of lighting loads. The miniature size makes it ideally suited for mounting in luminaires to provide local control of individual fittings. It will switch incandescent, fluorescent and compact fluorescent lighting.

Key Features

- Dimming with lux level sensing
- Constant light functionality
- Programmable using optional IR handset (p. 104)
- Compatible with with Helvar 1-10 V ballasts / drivers

Technical Data

Supply voltage	220 - 240 V AC, 50 Hz
Max load capacity	2 A – INC, ELV, FL, and CFL 4 x 1-10 V ballasts
Light level	200 – 900 Lux
Ambient temperature:	-10 …35 °C
PIR detection area:	5 m (mounting height 2.8m)
Type	Class II

Please see page 104 for more information

µDim Microwave Switching Sensor

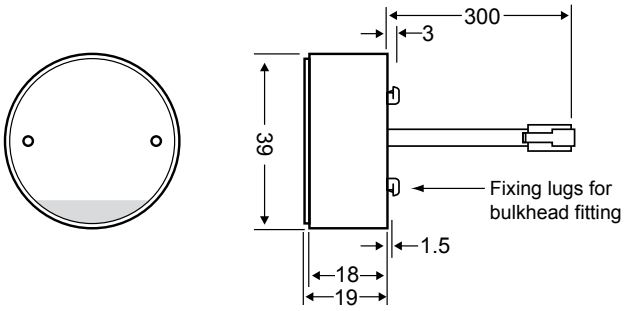

Connections

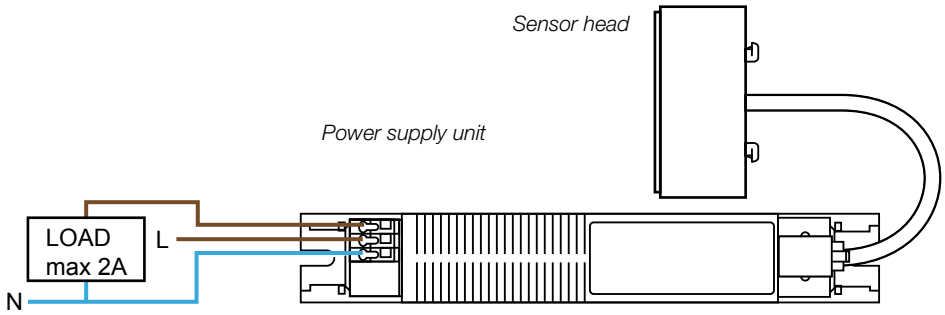

Introduction

The SL-MW-SW miniature microwave presence detector provides automatic control of lighting loads. The unit comes complete with a flush-mount bracket, allowing unobtrusive mounting of the sensor head into ceiling tiles or onto solid surfaces. It has been designed so that it can be used for luminaire mounted or ceiling mounted applications. As microwave radiation penetrates plastic and glass, this unit has been specifically designed to be mounted inside a luminaire.

Key Features

- Time delay function
- Switching with lux level sensing
- Programmable using optional IR handset (p. 104)

Technical Data

Supply voltage	220 - 240 V AC, 50 Hz
Max load capacity	2 A (4 ballasts)
Light level	200 - 900 Lux
Ambient temperature:	-10 …35 °C
PIR detection area:	8 m (mounting height 2.8m)
Type	Class II

Please see page 104 for more information

µDim Microwave 1-10 V Sensor

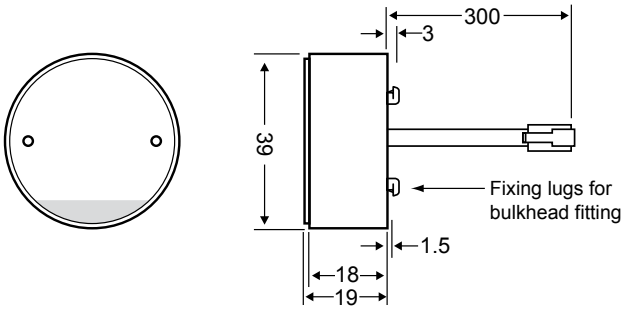

Connections

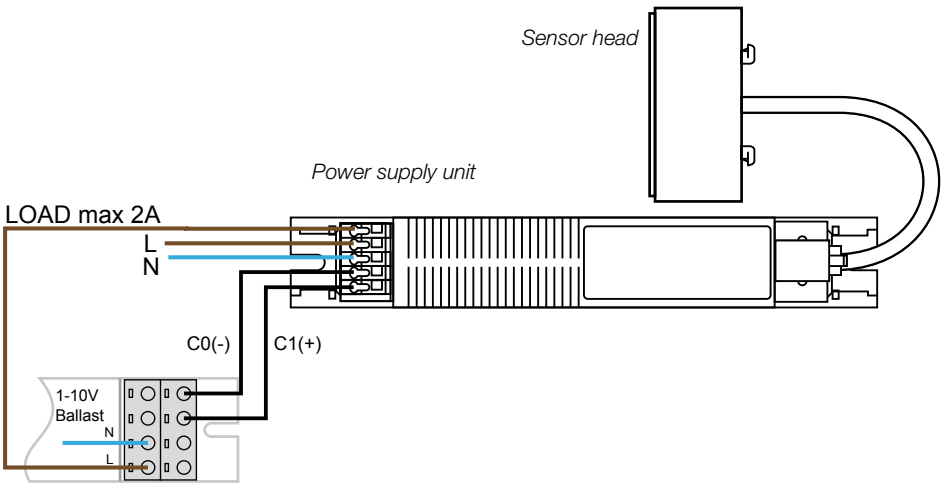

Introduction

The SL-MW-AN miniature microwave presence detector provides automatic control of lighting loads. The unit comes complete with a flush-mount bracket, allowing unobtrusive mounting of the sensor head into ceiling tiles or onto solid surfaces. It has been designed so that it can be used for luminaire mounted or ceiling mounted applications. As microwave radiation penetrates plastic and glass, this unit has been specifically designed to be mounted inside a luminaire.

Key Features

- Time delay function
- Constant light functionality
- Switching with lux level sensing
- Programmable using optional IR handset (p. 104)
- Compatible with with Helvar 1-10 V ballasts / drivers

Technical Data

Supply voltage	220 - 240 V AC, 50 Hz
Max load capacity	Relay Output - 2 A Dimmed Output - 4 x 1-10 V ballasts
Light level	200 – 900 Lux
Ambient temperature:	-10 …35 °C
PIR detection area:	8 m (mounting height 2.8m)
Type	Class II

Please see page 104 for more information

µDim Microwave DALI Sensor

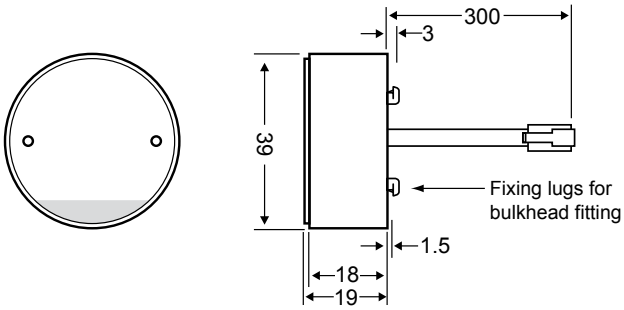

Connections

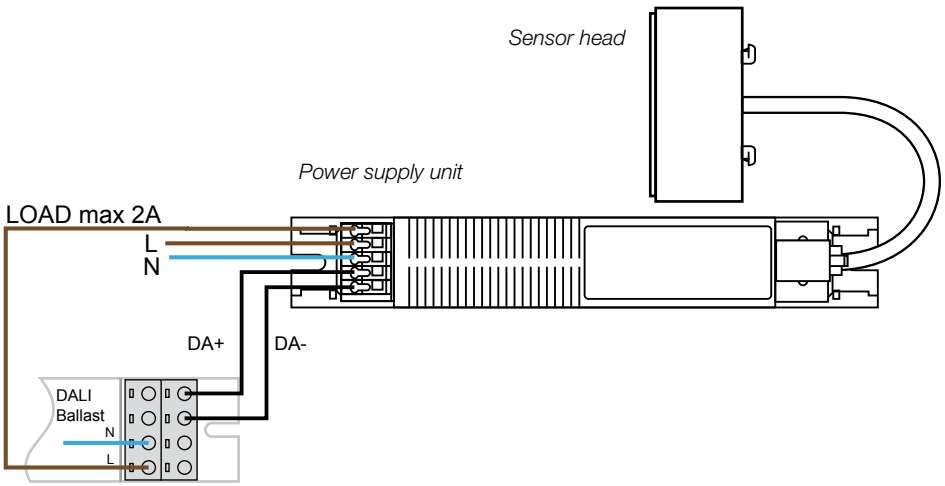

Introduction

The SL-MW-DA miniature microwave presence detector provides automatic control of lighting loads. The unit comes complete with a flush-mount bracket, allowing unobtrusive mounting of the sensor head into ceiling tiles or onto solid surfaces. It has been designed so that it can be used for luminaire mounted or ceiling mounted applications. As microwave radiation penetrates plastic and glass, this unit has been specifically designed to be mounted inside a luminaire.

Key Features

- Time delay function
- Constant light functionality
- Switching with lux level sensing
- Programmable using optional IR handset (p. 104)
- Compatible with with Helvar DALI ballasts / drivers

Technical Data

Supply voltage	220 - 240 V AC, 50 Hz
Max load capacity	Relay Output - 2 A Dimmed Output - 4 x DALI ballasts
Light level	200 – 900 Lux
Ambient temperature:	-10 …35 °C
PIR detection area:	8 m (mounting height 2.8m)
Type	Class II

Please see page 104 for more information

SA-IR-PROG µDim IR Programmer

The SA-IR-PROG is a compact infrared handset used for the programming of µDim sensors. Please refer to µDim sensor datasheets and user guides for more information.

Power supply unit dimensions (all µDim models)

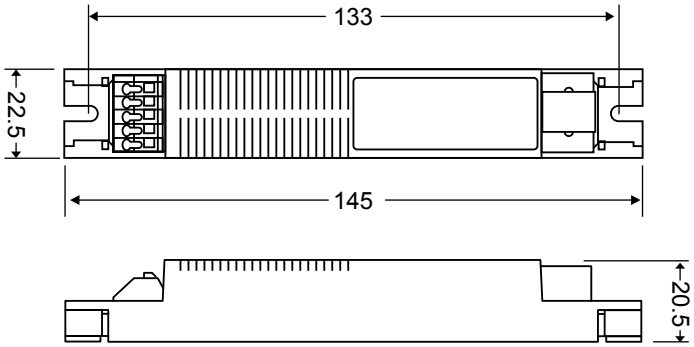

Detection areas

SS-PIR-SW, SS-PIR-AN

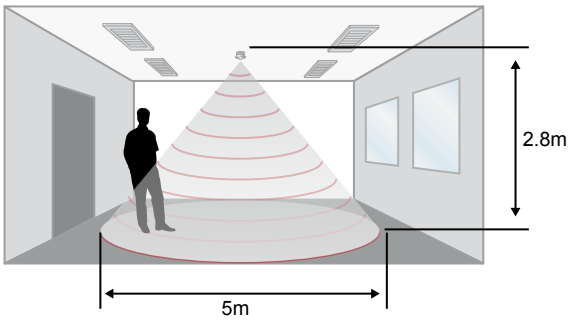

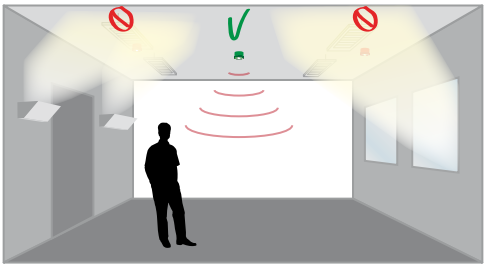

SL-MW-SW, SL-MW-AN, SL-MW-DA

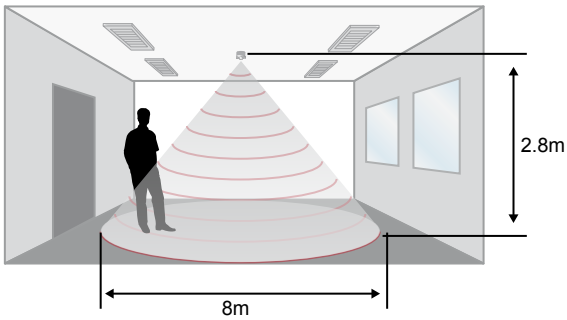

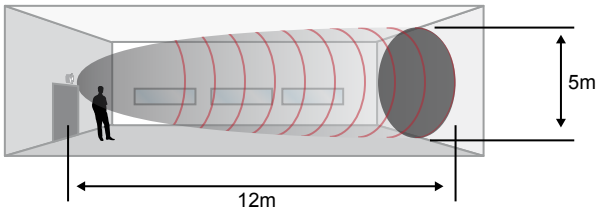

TK4 modular ballast controller

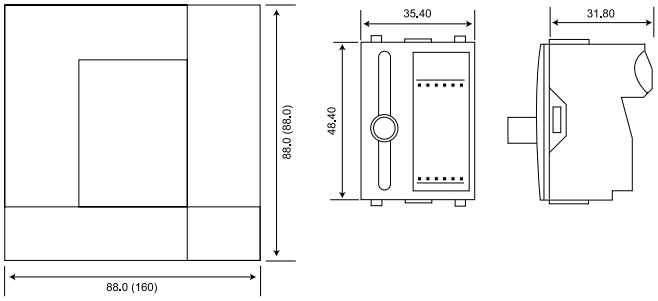

Connections

For loads over 20 ballasts use a contactor.

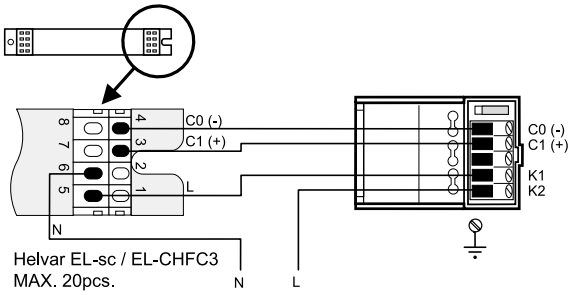

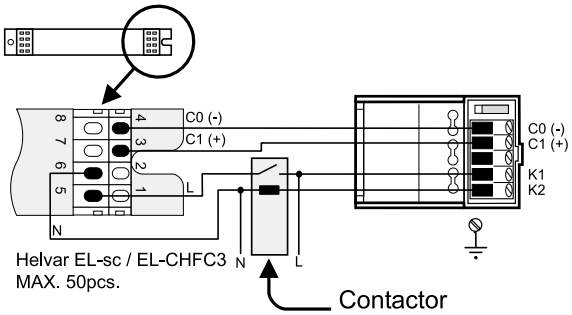

Introduction

Helvar's modular ballast controller offers EN 60929 (1-10 V) ballast control together with a mains power switch. The TK4 is styled to compliment the Helvar DIGIDIM panel range and offers the same flexibility that the modular concept provides which allows any mix of TK4 and DIGIDIM control panels.

The TK4 is available in the following standard finishes:

- Satin white plastic
- Lacquered polished brass
- Satin stainless steel
- Stainless Steel & Grey Insert

Technical Data

Switch Rating:	10 A (resistive) VAC
Switch Load Capacity:	Up to 20 Helvar EL-sc ballasts
Ambient temperature:	0 …35 °C
Relative Humidity:	90 % max, non-condensing
Storage Temp:	-10 °C . . . 70 °C
IP Rating:	30
Isolation:	4 kV

Product Order Codes: 140 200 Satin White Plastic Single Gang
140 201 Lacquered Polished Brass
140 202 Satin Stainless Steel
140 203 Stainless Steel & Grey Insert

Helvar ballasts for fluorescent lamps

Lamp type	W	Length (mm)	Cap	Standard electronic ballast	Page	Controllable electronic ballast	Page	Digital DALI electronic ballast	Page	Magnetic Ballast (230 V, 50 Hz)	Page
T5	**4**	136	G5							**L 8 D** **L 8 DL** [1]	47
(FD-H)	**6**	212	G5							**L 8 D** **L 8 DL** [1]	47
ø16mm	**8**	288	G5	EL1/2x9-13TCs [2]	-					**L 8 D** **L 11 D**	47
	13	517	G5		-					L 13 DL [1]	47
	14	549	G5	**EL1x14-35s** **EL2x14-35s** **EL3/4x14s** **EL1x14-35s-u** **EL2x14-35s-u** **EL3/4x14s-u** EL1/2x9-13TCs	6 8 15	**EL1x14sc** **EL2x14sc** **EL4x14sc**	22	**EL1x14-35iDim** **EL2x14-35iDim** **EL3x14iDim** **EL4x14iDim**	30		
	21	849	G5	**EL1x14-35s** **EL2x14-35s** **EL1x14-35s-u** **EL2x14-35s-u** EL1/2x9-13TCs	6 8 15	**EL1x21sc** **EL2x21sc**	22	**EL1x14-35iDim** **EL2x14-35iDim**	30		
	24	549	G5	**EL1x24s** **EL2x24s** **EL3/4x24s-u**	6 8	**EL1x24sc** **EL2x24sc**	22	**EL1x24iDim** **EL2x24iDim**	30		
	28	1149	G5	**EL1x14-35s** **EL2x14-35s** **EL1x14-35s-u** **EL2x14-35s-u** EL1/2x9-13TCs	6 8 15	**EL1x28sc** **EL2x28sc**	22	**EL1x14-35iDim** **EL2x14-35iDim**	30		
	35	1449	G5	**EL1x14-35s** **EL2x14-35s** **EL1x14-35s-u** **EL2x14-35s-u**	6 8	**EL1x35sc** **EL2x35sc**	22	**EL1x14-35iDim** **EL2x14-35iDim**	30		
	39	849	G5	**EL1x39/36s** **EL2x39/36s**	6	**EL1x39sc** **EL2x39sc**	22	**EL1x39iDim** **EL2x39iDim**	30		
	49	1449	G5	**EL1x49s** **EL2x49s** **EL1x49s-u** **EL2x49s-u**	6 8	**EL1x49sc** **EL2x49sc**	22	**EL1x49iDim** **EL2x49iDim**	30		
	54	1149	G5	**EL1x54s** **EL2x54s**	6	**EL1x54sc** **EL2x54sc**	22	**EL1x54iDim** **EL2x54iDim**	30		
	80	1449	G5	**EL1x80s** **EL2x80s-u**	6 8	**EL1x80sc**	22	**EL1x80iDim** **EL2x80iDim**	30		

*Types printed **BOLD** are ENEC approved combinations. Other combinations mentioned are tested and recommended by Helvar.*
Please check CE compatibility and EEI classification from ballast datasheets.
1) Approved to EN 61347-2-8
2) For a combination of two 8 W T5-lamps

***Note:** All combinations can be used as well with Eco-lamps.*

Helvar ballasts for fluorescent lamps

Lamp type	W	Length (mm)	Cap	Standard electronic ballast	Page	Controllable electronic ballast	Page	Digital DALI electronic ballast	Page	Magnetic Ballast (230 V, 50 Hz)	Page
T8 **(FD-E)** **ø26mm** 	**18**	590	G13	**EL1x18s** **EL2x18s** **EL3/4x18s** **EL3/4x18s-u** **EL1x18ngn** **EL2x18ngn** **EL4x18ngn**	10 11	**EL1x18sc** **EL2x18sc** **EL4x18sc**	24		-	**L 18 A-L** **L 18 A-K** **L 18 A-T** **L 2x18 A-L** **L 2x18 A-T** **L 20 A-P** **L 26 TS5 - 100mm** **L 18 TL2** **L 18 TL3** **L 18 TL4**	40
	36	1200	G13	**EL1x36/40/18s** **EL2x36/40s** **EL1x36/40s-u** **EL2x36/40s-u** **EL1x36ngn** **EL2x36ngn** EL1x18-42TCs	10 10 -	**EL1x36sc** **EL2x36sc**	24	**EL1x36iDim** **EL2x36iDim**	27	**L 36 A-T** **L 36 A-K** **L 40 A-L** **L 40 A-C** **L 36 A-TK** **L 36 TL2** **L 36 TL3** **L 36 TL4**	40
	58	1500	G13	**EL1x58s** **EL2x58s** **EL1x58s-u** **EL2x58s-u** **EL1x58ngn** **EL2x58ngn**	10 11	**EL1x58sc** **EL2x58sc**	24		-	**L 58 TL2** **L 58 TL3** **L 58 TL4** **L 58 TL4 - 220mm** **L 58 A-S** **L 65 A-P** **L 58 A-K** **L 58 A-T** **L 58 A-TK**	41
	70	1500	G13	**EL1x70s** **EL2x70s**	10	**EL1x70sc**	24		-	L 75 A-S [2)] L 70 TL4 [1)2)]	40
	15	450	G13		-		-		-	**L 15 A** **L 15 A-P** **L 15 TL3**	40
	16	720	G13		-		-		-	**L 16 D** **L 16 DL**	40
	23	970	G13		-					L 15 A-P	-
	30	900	G13	EL2x32/42TCs	15		-		-	**L 30 A** **L 30 A-P** **L 30 TL2**	40
	32 [3)]	1200	G13	EL1x49s EL2x49s	-		-		-		-
	36	970		EL1x36/40/18s EL2x36/40s EL1x36/40s-u EL2x36/40s-u	-		-		-		-
	38	1047	G13	EL1x36/40/18s EL2x36/40s	-	EL1x36sc EL2x36sc	-		-	L 36 TL2 L 36 TL4 L 36 A-K L 36 A-T L40 A-L L40 A-C **L 36 TL3** L 36 A-TK	40

*Types printed **BOLD** are ENEC approved combinations. Other combinations mentioned are tested and recommended by Helvar.*
Please check CE compatibility and EEI classification from ballast datasheets.
1) Approved to EN 61347-2-8
2) 240 V, 50 Hz
3) Not T8 eco lamp

A

Helvar ballasts for fluorescent lamps

Lamp type	W	Cap	Standard electronic ballast	Page	Controllable electronic ballast	Page	Digital DALI electronic ballast	Page	Magnetic Ballast (230 V, 50 Hz)	Page
T5 circular 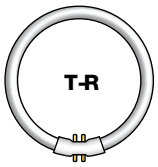	**22**	2GX13	**EL1/2x18-42TCs** **EL1x18-42TCs**	15	**EL1/2x18-42CHFC3**	-[3]	**EL1/2x18/24iDim-c**	31		
	40	2GX13	**EL1/2x18-42TCs** **EL1x18-42TCs** **EL2x32/42TCs**[1]	15	**EL1/2x18-42CHFC3** EL1x39sc EL2x39sc	-[3] 25 -	**EL1/2x18/24iDim-c**	31		
	55	2GX13	EL1x55s	-	EL1x55sc	-				
Circline **(FD-E)** 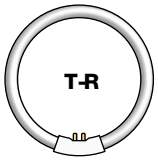	**22**	G10q							**L 30 TL2** L 30 A	46
	32	G10q							**L 32 TB2**	46
	40	G10q							L 36 TL2 L 36 TL3 L 36 TL4 L 36 A-K L 36 A-T L40 A-L L40 A-C L 36 A-TK	-
Mod-U-line **(FU-E)** 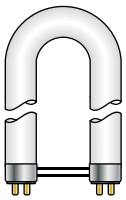	**40**	G13		-					L 36 TL2 L 36 TL3 L 36 TL4 L40 A-L L40 A-C L 36 A-K L 36 A-T L 36 A-TK	-
TC-DD **2D-lamp GR8, for magnetic ballast only GR10q, for electronic ballast or magnetic with external starter** 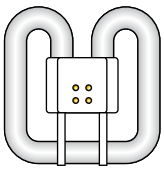	**10**	GR10q	**EL1/2x9-13TCs** **EL1x9-13TCs**	15						
	16	GR8, GR10q	**EL1/2x9-13TCs** **EL1x9-13TCs**	15					**L16 D** [2] **L16 DL**	46
	21	GR8, GR10q	EL1/2x18-42TCs	15						
	28	GR8, GR10q	**EL1/2x18-42TCs** **EL1x18-42TCs**	15					L18 TL2 L18 TL3 L20 A-P L18 A-L L18 A-T L18 A-K **L18 TL4**	46
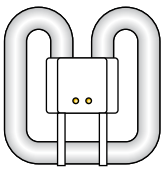	**38**	GR8, GR10q	**EL1/2x36/38TCs**	15					L36 TL2 L36 TL3 L36 TL4 L40 A-C L36 A-K L36 A-T L36 A-TK	46

*Types printed **BOLD** are ENEC approved combinations. Other combinations mentioned are tested and recommended by Helvar.*
Please check CE compatibility and EEI classification from ballast datasheets.
1) For a combination of one 22W and one 40 W circular lamp
2) GR8 not ENEC approved
3) See section 2, for connection diagrams

Helvar ballasts for fluorescent lamps

Lamp type	W	Cap	Standard electronic ballast	Page	Controllable electronic ballast	Page	Digital DALI electronic ballast	Page	Magnetic Ballast (230 V, 50 Hz)	Page
TC-L **(FSD-E)** 	**18**	2G11	**EL1/2x18-42TCs** **EL1x18-42TCs** **EL1x36/40/18s** EL1x36/40s-u	14 12	**EL1/2x18-42CHFC3**	-[2]	**EL1/2x18/24iDim-c**	31	L26 TS5-100mm **L18 TL2** L18 TL3 **L18 TL4** L20 A-P L18 A-K L18 A-T L18 A-L	45
	24	2G11	**EL1/2x18-42TCs** **EL1x18-42TCs** **EL1x24s** **EL2x24s** EL3/4x24s-u	14 12	**EL1/2x18-42CHFC3** EL1x24sc EL2x24sc	-[2] 25	**EL1x24iDim** **EL2x24iDim** **EL1/2x18/24iDim-c**	30 31	**L26 TS5-100mm** L18 TL2 L18 TL3 **L18 TL4** L20 A-P L18 A-K L18 A-T L18 A-L	45
	26	2GX11	EL1x14-35s EL2x14-35s EL1x14-35s-u EL2x14-35s-u				EL1x14-35iDim [1] EL2x14-35iDim [1]	33		
	28	2GX11	EL1x14-35s EL2x14-35s EL1x14-35s-u EL2x14-35s-u				EL1x14-35iDim [1] EL2x14-35iDim [1]	33		
	36	2G11	**EL1x39/36s** **EL2x39/36s** **EL1/2x36/38TCs** EL1/2x18-42TCs EL1x18-42TCs EL2x36ngn	12 14	**EL1x36sc** **EL2x36sc**	25	**EL1x36iDim** **EL2x36iDim**	30	L36 TL2 L36 TL3 L36 TL4 L40 A-C L36 A-T L36 A-K L36 A-TK	45
	40	2G11	**EL1x36/40/18s** **EL1x36/40s-u** **EL2x36/40s** **EL2x36/40s-u** **EL1/2x18-42TCs** **EL1x18-42TCs**	12 14	**EL1/2x18-42CHFC3** EL1x39sc EL2x39sc	-[2] 25	EL1x39iDim EL2x39iDim			
	55	2G11	**EL1x55s** **EL2x55s**	12	**EL1x55sc** **EL2x55sc**	20	**EL1x55iDim** **EL2x55iDim**	30		
	80	2G11	**EL1x80s** **EL2x80s-u**	12	EL1x80sc	25	**EL1x80iDim** **EL2x80iDim**	30		
TC-F **(FSS-E)** 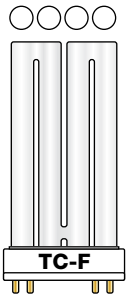 	**18**	2G10	**EL1/2x18-42TCs** **EL1x18-42TCs** **EL1x36/40/18s** EL1x36/40s-u	14 12	**EL1/2x18-42CHFC3**	-[2]	**EL1/2x18/24iDim-c**	31	L18 TL2 L18 TL3 L18 TL4 L20 A-P L18 A-L L18 A-K L18 A-T	
	24	2G10	**EL1x24s** **EL2x24s** EL3/4x24s-u **EL1/2x18-42TCs** **EL1x18-42TCs**	12 14	EL1x24sc EL2x24sc **EL1/2x18-42CHFC3**	25 -[2]	**EL1/2x18/24iDim-c**	31	L18 TL2 L18 TL3 L18 TL4 L26 TS5-100mm L26 TS5-105mm L20 A-P L18 A-L L18 A-T L18 A-K	-
	36	2G10	**EL1x39/36s** **EL2x39/36s** **EL1/2x36/38TCs** EL1/2x18-42TCs	12 14	EL1x36sc EL2x36sc	25	EL1x36iDim EL2x36iDim		L36 TL2 L36 TL3 L36 TL4 L36 A-T L36 A-TK L36 A-K L40 A-C	-

*Types printed **BOLD** are ENEC approved combinations. Other combinations mentioned are tested and recommended by Helvar.*

Please check CE compatibility and EEI classification from ballast datasheets.

1) Dimming range 3-100 %

2) See section 2, for connection diagrams

Helvar ballasts for fluorescent lamps

Lamp type	ILCOS	W	Cap	Standard electronic ballast	Page	Controllable electronic ballast	Page	Digital DALI electronic ballast	Page	Magnetic Ballast (230 V, 50 Hz)	Page
TC-S	**FSD-I**	**5**	G23							**L11 D** L11 DL [1]	47
		7	G23							**L11 D** **L11 DL** [1]	47
		9	G23							**L11 D** **L11 DL** [1]	47
		11	G23							**L11 D** **L11 DL** [1]	47
TC-SE	**FSD-E**	**9**	2G7	**EL1/2x9-13TCs** **EL1x9-13TCs**	15						
		11	2G7	**EL1/2x9-13TCs** **EL1x9-13TCs**	15						
TC-D	**FSQ-I**	**10**	G24d-1							**L13 D** **L13 DL** [1]	46
		13	G24d-1							**L13 D** **L13 DL** [1]	46
		18	G24d-2							**L18 D** **L18 TLD-100mm** **L18 DL**	46
		26	G24d-3							L18 TL2 L18 TL3 **L26 S-100mm** **L26 TS5-105mm** **L26 TS5-100mm** L20 A-P L18 A-L L18 A-K L18 A-T **L18 TL4**	46
TC-DE	**FSQ-E**	**10**	G24q-1	**EL1/2x9-13TCs** **EL1x9-13TCs**	16						
		13	G24q-1	**EL1/2x9-13TCs** **EL1x9-13TCs**	16	**EL1/2x13CHFC3**	-[2]				
		18	G24q-2	**EL1/2x18TCs** **EL1x18TCs**	16	**EL1/2x18CHFC3**	-[2]	**EL1/2x18iDim-c**	34		
		26	G24q-3	**EL1/2x18-42TCs** **EL1x18-42TCs** **EL2x32/42TCs**	16	**EL1/2x18-42CHFC3** **EL2x26-42CHFC3**	-[2]	**EL1/2x26-42iDim-c** **EL2x26-42iDim-c**	34		

*Types printed **BOLD** are ENEC approved combinations. Other combinations mentioned are tested and recommended by Helvar.*

Please check CE compatibility and EEI classification from ballast datasheets.

1) Approved to EN61347-2-8

2) See section 2, for connection diagrams

Helvar ballasts for fluorescent lamps

Lamp type	ILCOS	W	Cap	Standard electronic ballast	Page	Controllable electronic ballast	Page	Digital DALI electronic ballast	Page	Magnetic Ballast (230 V, 50 Hz)	Page
TC-T 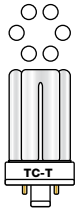	**FSM-I**	**18**	GX24d-2							L18 D L18 TLD-100mm	-
		26	GX24d-3							L18 TL2 L18 TL3 L26 TS5-105mm L26 TS5-100mm	- - -
TC-TE 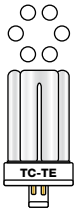	**FSM-E**	**13**	GX24q-1	**EL1/2x9-13TCs** **EL1x9-13TCs**	17	**EL1/2x13CHFC3**	-[2]				
		18	GX24q-2	**EL1/2x18TCs** **EL1x18TCs**	17	**EL1/2x18CHFC3**	-[2]	**EL1/2x18iDim-c**	34		
		26	GX24q-3	**EL1/2x18-42TCs** **EL2x32/42TCs**	17	**EL1/2x18-42CHFC3** **EL2x26-42CHFC3**	-[2]	**EL1/2x26-42iDim-c** **EL2x26-42iDim-c**	34		
		32	GX24q-3	**EL1/2x18-42TCs** **EL1x18-42TCs** **EL2x32/42TCs**	17	**EL1/2x18-42CHFC3** **EL2x26-42CHFC3**	-[2]	**EL1/2x26-42iDim-c** **EL2x26-42iDim-c**	34		
		42	GX24q-4	**EL1/2x18-42TCs** **EL1x18-42TCs** **EL2x32/42TCs**	17	**EL1/2x18-42CHFC3** **EL2x26-42CHFC3**	-[2]	**EL1/2x26-42iDim-c** **EL2x26-42iDim-c**	34		
		57	GX24q-4	**EL1/2x18-42TCs** **EL1x18-42TCs**	17	**EL1/2x18-42CHFC3**	-[2]	EL1/2x26-42iDim-c [3]			
PL-R		**14**	GR14q-1	**EL1/2x14/17TCs** **EL1x14/17TCs**	17						
		17	GR14q-1	**EL1/2x14/17TCs** **EL1x14/17TCs**	17						

*Types printed **BOLD** are ENEC approved combinations. Other combinations mentioned are tested and recommended by Helvar.*
Please check CE compatibility and EEI classification from ballast datasheets.
1) Approved to EN61347-2-8
2) See section 2, for connection diagrams
3) U_{IN} > 220 V , T_a > 18 °C