Three phase Synchronous and Asynchronous Generators

HYDROPOWER APPLICATIONS

MarelliGenerators®

SIN.CT.027.4 GB

HYDROPOWER PLANT GENERATORS

MarelliGenerators offers a wide range of solutions for hydropower applications. Our synchronous and asynchronous generators represent the best choice due to their certified quality, their versatile design allowing the generator to be customised to your needs, and to the experience acquired by more than 100 years of production. The undisputed quality proved by all MarelliGenerators products is shown by their high reliability, high efficiency and by their unchanged performance during many years of service.

SYNCHRONOUS GENERATORS

Power range @ 50 Hz - Low voltage

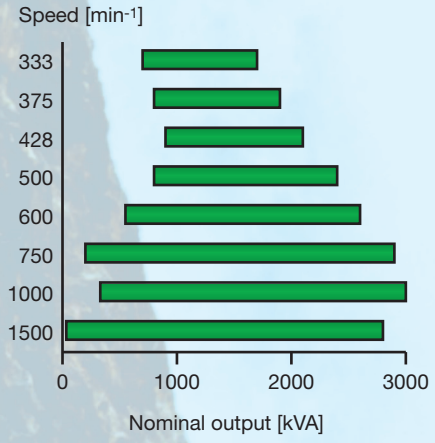

Power range @ 50 Hz - Medium voltage

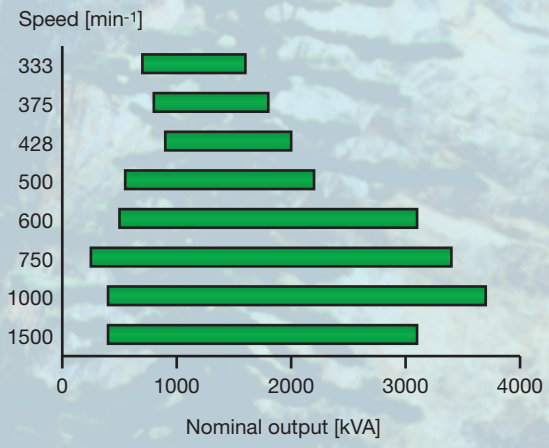

ASYNCHRONOUS GENERATORS

Power range @ 50 Hz - Low voltage

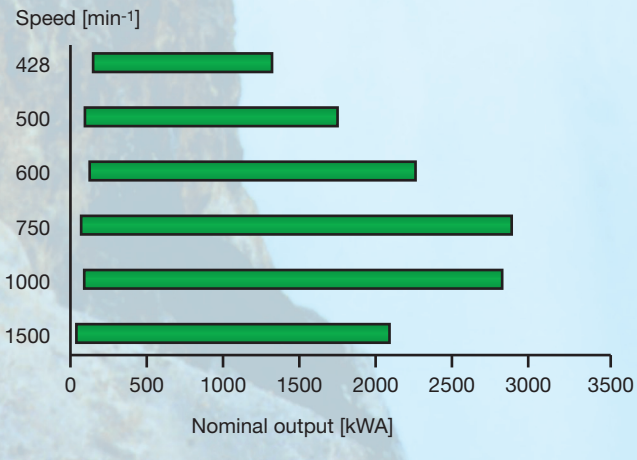

MarelliGenerators®

MarelliGenerators represents the best know-how within the hydropower field by ensuring our product has outstanding technical features.

RELIABILITY

- Long life endurance of electrical components and bearings.
- Class H insulation system for synchronous and class F for asynchronous generators. Impregnation with polyester resin using the Vacuum Pressure Impregnation (VPI) system. A further protection from any corrosion phenomenon is guaranteed by a tropicalization treatment.
- High safety factors to warrant the functionality of generators even in the worst working conditions.

HIGH PERFORMANCE

- Active parts are designed using the latest technologies and the best materials available in order to ensure high efficiency values.

SAFETY

- Space heaters are installed to avoid the risk of condensate inside generators.
- Bearings and stator windings temperatures are totally supervised by using a wide range of sensors.
- Synchronous generators can be equipped with electronic control devices for particular working conditions and to ensure real time monitoring.

TOTALLY CUSTOMISABLE

All generators are totally customisable.

- Nominal voltage from 380 to 6.600 V.
- From 4 to 18 poles; polarities not mentioned in the following pages might be available on request.
- Horizontal or vertical shaft.
- Degree of protection up to IP 55 using a heat exchanger.
- Runner directly connected to the generator shaft to avoid all the supports of the runner shaft.
- Bushings are used in strong hydraulic load applications to eliminate all the maintenance operations required by the rolling bearings.
- Use of flywheels to rise the proper inertial momentum of the generator.
- Wide set of control and adjustment devices (also with digital logic unit, if required) for synchronous generators.

MarelliGenerators®

FRAME SIZES 400 - 710 SYNCHRONOUS GENERATORS: TECHNICAL FEATURES

STANDARDS
All generators are designed according to the IEC 60034-1, CEI EN 60034-1, BS 4999-5000, VDE 0530, NF 51-100, OVE M-10 and NEMA MG 1.22 standards and can be incorporated in the “CE” marked machinery.

AVAILABLE VOLTAGE
Generators can be supplied with the following voltage range:
- Low voltage (380 - 480 V)
- Medium voltage (3.000 - 6.600 V)

Voltages not listed can be supplied on request.

EXCITATION SYSTEM
Generators are self-excited through a brushless type excitation system.
The voltage is maintained within ± 0,5% of the nominal value in steady state conditions.
Generators are equipped with an auxiliary winding, or with the Varicomp overexcitement device, in order to supply a three-phase short circuit current 2,5 times greater than the nominal current of the generator.

OVERLOADS
The following overloads are permitted: 10% for one hour, 15% for ten minutes, 30% for four minutes and 50% for two minutes. All overloads must occur occasionally and must be followed by a minimum of one hour of running at nominal load or less.

OPERATING CONDITIONS

Parallel operation
All generators are provided with an oversized damper cage and are suitable for parallel operation with other generators, when equipped with a paralleling unit. An automatic power factor regulator is available on request.

Environmental conditions
The rated outputs refer to an installation height up to 1.000 m asl and to a maximum ambient temperature of 40°C. For higher altitudes and different temperature values the rated outputs must be re-calculated using the factors listed in the following table.

Altitude [m asl]	Ambient temperature [°C]			
	30	40	45	50
1000	1,04	1,00	0,98	0,95
1500	1,03	0,97	0,95	0,92
2000	0,99	0,93	0,91	0,88
2500	0,95	0,90	0,88	0,86
3000	0,91	0,86	0,84	0,82

Power factor
The nominal power factor is 0,8 lagging. For different power factor values the following derating factors must be applied:

Power factor	1,0	+0,8	+0,7	+0,6	+0,5	+0,3	0
K_φ	1,0	1,0	0,93	0,88	0,84	0,82	0,80

For negative power factors please contact MarelliMotori.

DEGREE OF PROTECTION
Standard generators are air-cooled with an IP 23 degree of protection (IC 01 cooling type). Inlet and outlet air filters (IC 01 cooling type) are available on request to upgrade the index to IP 44.
To obtain a higher index of protection (IP 44, IP 54) generators can be supplied with an air-to-water heat exchanger installed on the body of the machinery (IC 81W cooling type).

SHAFT ORIENTATION
Generators are supplied with a horizontal (IM B3) or vertical (IM V10) shaft configuration. The vertical generators are equipped with a thrust bearing on the no-drive-end (NDE) side.

BEARINGS
Standard generators are supplied with grease-lubricated rolling bearings. All bearings are oversized to guarantee a minimum lifetime of 100.000 h (L_{10h} = 100.000 h), value obtained concerning to an unloaded standard shaft. The NDE bearing is conveniently insulated (*) to avoid shaft currents.

RUNNER DIRECTLY CONNECTED TO THE SHAFT
Generators can be equipped with a special shaft extension to directly connect the hydraulic turbine runner. In this configuration all bearings and the shaft are designed to withstand to axial and radial loads caused by the hydraulic thrust and by the weight of the runner. Depending on the loads applied and on the runaway speed of the runner, generators can be supplied with oil-lubricated rolling bearings or sleeve bearings.

ROTOR BALANCING
Rotors are dynamically balanced with a half key applied to the shaft extension in accordance with IEC 60034-14 to vibration grade normal (N) in standard execution. Generators can be supplied with reduced (R) or special (S) vibration levels on request.

INSULATION
Class H standard insulation system allows a maximum winding temperature rise of 125°C referring to an ambient temperature of 40°C. Windings are impregnated with polyester resin using the latest technology (VPI system). An enamel insulator (tropicalization treatment) coats all inner parts of the generator in order to protect it from corrosion.

TEMPERATURE SENSORS
Generators are equipped with three PT100 temperature sensors (one for each phase) installed into the slots to supervise the stator winding temperature and with a PT100 for each bearing to monitor its temperature (**). To control inlet and outlet air temperature of the air-to-water heat exchanger, PT100's are installed both on the NDE side and on the drive-end (DE) side on request. If the air-to-water heat exchanger is installed, PT100's are used to control the inlet and outlet water temperature.

FLYWHEEL
When the requested inertial momentum is higher than the actual inertial momentum of the generator, it is possible to extend the shaft on the NDE side in order to connect a flywheel.

TERMINAL BOXES
Generators are supplied with terminal boxes of appropriate dimensions in order to allow easy connection to the main leads. All generators allow the connection to the main leads and to the star point.
Two different terminal boxes, one for the star point and one for the leads for the auxiliary devices, are available on request.
Generators can be equipped with current transformers both on the main leads and the star point leads.
The standard degree of protection for terminal boxes is IP 44; the IP 55 can be installed on request.

EQUIPMENT

Standard
- Class H insulation
- VPI impregnation type
- Windings protected from corrosion (tropicalization)
- Six leads stator winding into the terminal box
- Parallel device between generators
- N° 3 PT100 into the stator winding
- N° 1 PT100 for each bearing (**)
- Anti-condensation thermal heaters
- IP 23 degree of protection
- IP 44 degree of protection for the terminal box
- Bearings: more than 100.000 h lifetime
- NDE side bearing insulated to avoid shaft currents (*)

Electric options
- Automatic power factor regulator
- Rheostat for voltage remote control
- Manual excitation device
- Excitement control
- Diode failure monitor
- Digital AVR
- In-terminal-box measurement transformers
- Encoder
- Tachometric dynamo

Mechanical options
- Inlet and outlet air filters (IP 44)
- Air-to-fresh water heat exchanger top mounted on generator
- IP 55 terminal box
- Star-point in separate terminal box
- Auxiliary leads into a separate terminal box
- Runner directly connected to the shaft of the generator
- Sleeve bearings
- Shaft extension
- Flywheel
- Arrangement for speed sensors
- Brush connection with rotor for earth fault detection
- Arrangement for vibration sensors into bearing box

(*) for frame sizes 400 and 500 with 4 and 6 poles on request
(**) for 400 frame size on request

SYNCHRONOUS GENERATORS / LOW VOLTAGE

Type	Leads	kVA rating @ Temperature Rise / Ambient Temp. (°C) Continuous duty 105 / 40 ΔT cl. F	80 / 40 ΔT cl. B	105 / 40 ΔT cl. F	80 / 40 ΔT cl. B	Moment of inertia (**) [kgm^2]	Weight (**) [kg]	Max overspeed [min^{-1}]
4 pole		**400V 50Hz - 1500 min^{-1}**		**480V 60Hz - 1800 min^{-1}**				
MJT 400 MA4	6	725	635	870	760	16,3	2.250	3.000
400 MB4	6	815	710	980	855	17,0	2.300	3.000
400 LA4	6	895	780	1.075	940	19,3	2.550	3.000
400 LB4	6	1.010	880	1.210	1.055	22,5	2.800	3.000
450 MB4	6	1.100	960	1.320	1.150	29,0	3.200	2.700
450 LA4	6	1.210	1.055	1.450	1.265	34,0	3.600	2.700
450 LB4	6	1.340	1.170	1.610	1.405	38,0	4.000	2.700
500 SC4	6	1.460	1.275	1.750	1.530	46,7	3.700	2.700
500 MB4	6	1.675	1.460	2.010	1.755	52,5	4.400	2.700
500 LA4	6	1.945	1.700	2.335	2.040	61,5	5.100	2.700
560 MA4	6	2.145	1.870	2.465	2.150	83	5.000	2.700
560 LA4	6	2.555	2.230	2.940	2.565	95	5.700	2.700
630 SA4	6	2.350	2.050	2.705	2.360	117	6.350	2.400
630 MA4*	6	2.550	2.225	2.935	2.560	151	7.500	2.400
630 LA4*	6	2.780	2.425	3.200	2.795	163	8.000	2.400
6 pole		**400V 50Hz - 1000 min^{-1}**		**480V 60Hz - 1200 min^{-1}**				
MJT 400 SA6	6	330	290	395	345	11,8	1.450	2.200
400 SB6	6	380	330	455	395	14,1	1.600	2.200
400 MA6	6	510	445	610	530	17,9	2.200	2.200
400 MB6	6	575	500	690	600	19,4	2.260	2.200
400 LA6	6	660	575	790	690	20,9	2.530	2.200
400 LB6	6	815	710	980	855	24,2	2.750	2.200
500 SA6	6	865	755	1.040	910	50,5	3.200	2.200
500 SC6	6	1.100	960	1.320	1.150	64,7	3.800	2.200
500 MB6	6	1.320	1.150	1.585	1.385	70,0	4.100	2.200
500 LA6	6	1.540	1.345	1.850	1.615	88,9	5.100	2.200
560 MA6	6	1.595	1.390	1.835	1.600	111	5.000	2.200
560 LA6	6	1.900	1.660	2.185	1.905	137	5.700	2.200
630 SC6	6	1.690	1.475	1.945	1.700	145	6.500	2.200
630 MA6	6	2.020	1.765	2.325	2.030	167	8.000	2.200
630 MB6	6	2.150	1.875	2.475	2.160	183	8.500	2.200
630 LA6	6	2.390	2.085	2.750	2.400	200	9.500	2.200
710 SC6*	6	2.560	2.235	2.870	2.505	on request		2.100
710 MA6*	6	2.970	2.590	3.330	2.905	on request		2.100
8 pole		**400V 50Hz - 750 min^{-1}**		**480V 60Hz - 900 min^{-1}**				
MJT 400 SA8	6	200	175	240	210	13,5	1.450	2.000
400 SB8	6	255	225	305	265	16,2	1.600	2.000
400 MA8	6	355	310	425	370	20,6	2.200	2.000
400 MB8	6	420	365	505	440	22,4	2.260	2.000
400 LA8	6	500	435	600	525	24,1	2.530	2.000
400 LB8	6	610	530	730	635	25,4	2.750	2.000
500 SA8	6	675	590	810	705	55,1	3.200	2.000
500 SC8	6	840	735	1.010	880	74,2	3.800	2.000
500 MB8	6	1.045	910	1.255	1.095	77,7	4.100	2.000
500 LA8	6	1.235	1.080	1.480	1.290	95,0	5.100	2.000
560 MA8	6	1.245	1.085	1.430	1.250	122	5.000	2.000
560 LA8	6	1.485	1.295	1.710	1.495	146	5.700	2.000
630 SC8	6	1.280	1.115	1.470	1.285	177	6.500	1.900
630 MA8	6	1.530	1.335	1.760	1.535	204	8.000	1.900
630 LA8	6	2.020	1.765	2.325	2.030	245	9.500	1.900
710 SC8	6	2.270	1.980	2.540	2.215	on request		1.800
710 MA8*	6	2.640	2.305	2.960	2.585	on request		1.800
710 LA8*	6	2.850	2.490	3.190	2.785	on request		1.800

*: 690 V recommended
**: Showed data could change depending on mounting.
The rated outputs refer to the following conditions: balanced and non deforming load, altitude below 1.000 m asl, power factor from 0,8 to 1.
For values of overspeed greater than as listed, please contact MarelliMotori.

SYNCHRONOUS GENERATORS / LOW VOLTAGE

Type	Leads	kVA rating @ Temperature Rise / Ambient Temp. (°C) Continuous duty 105 / 40 ΔT cl. F	80 / 40 ΔT cl. B	105 / 40 ΔT cl. F	80 / 40 ΔT cl. B	Moment of inertia (**) [kgm^2]	Weight (**) [kg]	Max overspeed [min^{-1}]
10 pole		**400V 50Hz - 600 min^{-1}**		**480V 60Hz - 720 min^{-1}**				
MJT 500 SA10	6	535	465	640	560	63,8	3.200	1.500
500 SC10	6	670	585	805	705	81,6	3.800	1.500
500 MB10	6	780	680	935	815	85,7	4.100	1.500
500 LA10	6	865	755	1.040	910	106,7	5.100	1.500
630 SC10	6	1.020	890	1.175	1.025	188	6.500	1.320
630 MA10	6	1.210	1.055	1.390	1.215	217	8.000	1.320
630 MB10	6	1.300	1.135	1.495	1.305	237	8.500	1.320
630 LA10	6	1.420	1.240	1.635	1.425	260	9.500	1.320
710 SC10	6	2.010	1.755	2.240	1.955	on request		1.320
710 MA10	6	2.420	2.110	2.720	2.375	on request		1.320
710 MB10*	6	2.580	2.250	2.890	2.525	on request		1.320
12 pole		**400V 50Hz - 500 min^{-1}**		**480V 60Hz - 600 min^{-1}**				
MJT 630 SC12	6	720	630	820	715	206	6.500	1.100
630 MA12	6	870	760	1.000	875	238	8.000	1.100
630 MB12	6	1.100	960	1.270	1.110	260	8.500	1.100
630 LA12	6	1.280	1.115	1.490	1.300	285	9.500	1.100
710 SA12	6	1.380	1.205	1.580	1.380	on request		1.100
710 MA12	6	1.780	1.555	2.040	1.780	on request		1.100
710 LA12	6	2.200	1.920	2.530	2.210	on request		1.100
14 pole		**400V 50Hz - 428 min^{-1}**		**480V 60Hz - 514 min^{-1}**				
MJT 710 SA14	6	750	655	850	740	on request		950
710 SC14	6	1.020	890	1.180	1.030	on request		950
710 MA14	6	1.220	1.065	1.410	1.230	on request		950
710 LA14	6	1.500	1.310	1.730	1.510	on request		950
710 LB14	6	1.700	1.485	1.960	1.710	on request		950
16 pole		**400V 50Hz - 375 min^{-1}**		**480V 60Hz - 450 min^{-1}**				
MJT 710 SA16	6	660	575	750	655	on request		825
710 SC16	6	900	785	1.040	910	on request		825
710 MA16	6	1.070	935	1.240	1.080	on request		825
710 LA16	6	1.330	1.160	1.520	1.325	on request		825
710 LB16	6	1.500	1.310	1.720	1.500	on request		825
18 pole		**400V 50Hz - 333 min^{-1}**		**480V 60Hz - 400 min^{-1}**				
MJT 710 SA18	6	590	515	680	595	on request		740
710 SC18	6	810	705	940	820	on request		740
710 MA18	6	970	845	1.110	970	on request		740
710 LA18	6	1.190	1.040	1.370	1.195	on request		740
710 LB18	6	1.350	1.180	1.550	1.355	on request		740

*: 690 V recommended
**: Showed data could change depending on mounting.
The rated outputs refer to the following conditions: balanced and non deforming load, altitude below 1.000 m asl, power factor from 0,8 to 1.
For values of overspeed greater than as listed, please contact MarelliMotori.

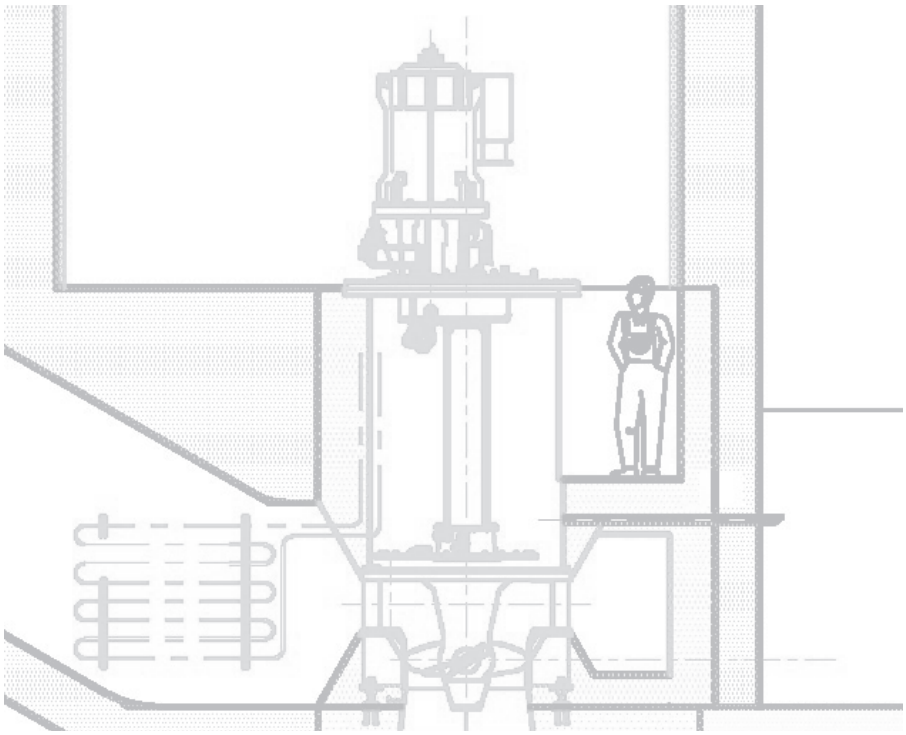

SYNCHRONOUS GENERATORS / MEDIUM VOLTAGE

Type	Leads	kVA rating @ Temperature Rise / Ambient Temp. (°C)								Moment of inertia	Weight	Max overspeed
		3000V				6000V						
		Continuous duty										
		105 / 40 ΔT cl. F	80 / 40 ΔT cl. B	105 / 40 ΔT cl. F	80 / 40 ΔT cl. B	105 / 40 ΔT cl. F	80 / 40 ΔT cl. B	105 / 40 ΔT cl. F	80 / 40 ΔT cl. B	(**) [kgm^2]	(**) [kg]	[min^{-1}]
4 pole		**50Hz - 1500 min^{-1}**		**60Hz - 1800 min^{-1}**		**50Hz - 1500 min^{-1}**		**60Hz - 1800 min^{-1}**				
MJHT 400 SA4	6	375	335	450	395	-	-	-	-	10,2	1.850	3.000
400 MA4	6	540	480	650	565	500	440	600	525	14,6	2.300	3.000
400 LA4	6	750	665	900	785	665	590	800	700	19,3	2.600	3.000
400 LB4	6	920	810	1.105	965	835	740	1.000	875	22,5	2.850	3.000
450 MB4	6	960	840	1.150	1.005	895	780	1.075	940	29,0	3.250	2.700
450 LA4	6	1.060	925	1.270	1.110	985	860	1.180	1.030	34,0	3.650	2.700
450 LB4	6	1.185	1.035	1.420	1.240	1.105	965	1.325	1.155	38,0	4.050	2.700
500 MA4	6	1.290	1.145	1.550	1.355	1.105	975	1.325	1.155	46,7	3.900	2.700
500 MB4	6	1.540	1.365	1.850	1.615	1.290	1.145	1.550	1.355	52,5	4.500	2.700
500 LA4	6	1.665	1.475	2.000	1.745	1.530	1.350	1.835	1.600	61,5	5.200	2.700
560 MA4	6	1.980	1.730	2.275	1.985	1.800	1.570	2.070	1.805	83	5.100	2.700
560 LA4	6	2.250	1.965	2.590	2.260	2.045	1.785	2.350	2.050	95	5.800	2.700
630 SA4	6	1.770	1.550	2.035	1.775	1.610	1.410	1.850	1.615	80	6.000	2.400
630 MA4	6	2.040	1.780	2.345	2.045	1.850	1.620	2.130	1.860	120	7.000	2.400
630 MB4	6	2.310	2.020	2.655	2.315	2.100	1.830	2.415	2.110	155	7.700	2.400
630 LA4	6	2.640	2.300	3.035	2.650	2.400	2.090	2.760	2.410	163	8.200	2.400
630 LB4	6	3.090	2.700	3.555	3.105	2.810	2.450	3.230	2.820	177	8.700	2.400
6 pole		**50Hz - 1000 min^{-1}**		**60Hz - 1200 min^{-1}**		**50Hz - 1000 min^{-1}**		**60Hz - 1200 min^{-1}**				
MJHT 400 MA6	6	385	340	460	400	-	-	-	-	17,9	2.300	2.200
400 LA6	6	560	495	670	585	490	435	590	515	20,9	2.650	2.200
400 LB6	6	600	530	720	630	525	465	630	550	24,2	2.850	2.200
500 SA6	6	685	605	820	715	590	520	710	620	50,5	3.300	2.200
500 MA6	6	840	745	1.010	880	735	650	880	770	70,0	4.200	2.200
500 MB6	6	1.000	885	1.200	1.045	875	775	1.050	915	73,6	4.500	2.200
500 LA6	6	1.125	995	1.350	1.180	1.000	885	1.200	1.045	88,9	5.200	2.200
560 MA6	6	1.710	1.490	1.965	1.715	1.575	1.375	1.810	1.580	111	5.100	2.200
560 LA6	6	1.890	1.650	2.175	1.900	1.735	1.515	1.995	1.740	137	5.800	2.200
630 SA6	6	1.320	1.150	1.520	1.325	1.200	1.050	1.380	1.205	94	6.000	2.200
630 MA6	6	1.610	1.400	1.850	1.615	1.460	1.280	1.680	1.465	145	6.700	2.200
630 MB6	6	1.900	1.660	2.185	1.905	1.720	1.510	1.980	1.730	167	8.100	2.200
630 LA6	6	2.000	1.750	2.300	2.010	1.820	1.590	2.095	1.830	190	9.000	2.200
630 LB6	6	2.100	1.840	2.415	2.110	1.910	1.670	2.195	1.915	200	9.600	2.200
710 SA6	6	2.180	1.910	2.505	2.185	1.990	1.730	2.290	2.000	on request		2.100
710 MA6	6	2.930	2.560	3.370	2.940	2.660	2.320	3.060	2.670	on request		2.100
710 LA6	6	3.220	2.810	3.705	3.235	2.920	2.550	3.360	2.935	on request		2.100
710 LB6	6	3.710	3.240	4.265	3.725	3.370	2.950	3.875	3.380	on request		2.100
8 pole		**50Hz - 750 min^{-1}**		**60Hz - 900 min^{-1}**		**50Hz - 750 min^{-1}**		**60Hz - 900 min^{-1}**				
MJHT 400 MA8	6	245	220	295	255	-	-	-	-	20,6	2.300	2.000
400 LA8	6	425	375	510	445	365	325	440	385	24,1	2.630	2.000
400 LB8	6	485	430	580	505	420	370	505	440	25,4	2.850	2.000
500 SA8	6	620	545	745	650	530	475	635	555	55,1	3.300	2.000
500 MA8	6	745	665	895	780	650	575	780	680	77,7	4.200	2.000
500 MB8	6	880	780	1.055	920	765	675	920	805	82,2	4.500	2.000
500 LA8	6	1.010	895	1.210	1.055	880	780	1.055	920	95,0	5.200	2.000
560 MA8	6	1.330	1.160	1.530	1.335	1.235	1.080	1.420	1.240	122,0	5.100	2.000
560 LA8	6	1.475	1.285	1.695	1.480	1.370	1.195	1.575	1.375	146,0	5.800	2.000
630 SA8	6	1.090	950	1.255	1.095	990	860	1.140	995	114	6.000	1.900
630 MA8	6	1.220	1.060	1.405	1.225	1.110	970	1.275	1.115	177	6.700	1.900
630 MB8	6	1.350	1.180	1.555	1.355	1.230	1.070	1.415	1.235	204	8.100	1.900
630 LA8	6	1.500	1.310	1.725	1.505	1.360	1.200	1.565	1.365	231	9.000	1.900
630 LB8	6	1.650	1.440	1.900	1.660	1.500	1.310	1.725	1.505	245	9.600	1.900
710 SA8	6	1.980	1.730	2.275	1.985	1.800	1.580	2.070	1.805	on request		1.800
710 MA8	6	2.610	2.280	3.000	2.620	2.370	2.070	2.725	2.380	on request		1.800
710 MB8	6	2.960	2.580	3.405	2.970	2.690	2.350	3.095	2.700	on request		1.800
710 LB8	6	3.340	2.920	3.840	3.350	3.040	2.650	3.495	3.050	on request		1.800

**: Showed data could change depending on mounting.
The rated outputs refer to the following conditions: balanced and non deforming load, altitude below 1.000 m asl, power factor from 0,8 to 1.
For values of overspeed greater than as listed, please contact MarelliMotori.

SYNCHRONOUS GENERATORS / MEDIUM VOLTAGE

Type	Leads	kVA rating @ Temperature Rise / Ambient Temp. (°C)								Moment of inertia	Weight	Max overspeed
		3000V				6000V						
		Continuous duty										
		105 / 40 ΔT cl. F	80 / 40 ΔT cl. B	105 / 40 ΔT cl. F	80 / 40 ΔT cl. B	105 / 40 ΔT cl. F	80 / 40 ΔT cl. B	105 / 40 ΔT cl. F	80 / 40 ΔT cl. B	(**) [kgm^2]	(**) [kg]	[min^{-1}]
10 pole		**50Hz - 600 min^{-1}**		**60Hz - 720 min^{-1}**		**50Hz - 600 min^{-1}**		**60Hz - 720 min^{-1}**				
MJHT 500 SA10	6	465	410	560	490	400	360	480	420	63,8	3.300	1.500
500 MA10	6	565	500	680	595	490	435	590	515	85,7	4.200	1.500
500 MB10	6	665	590	800	700	580	515	695	605	89,7	4.700	1.500
500 LA10	6	740	660	890	775	645	570	775	675	106,7	5.200	1.500
630 SA10	6	920	800	1.060	925	830	730	955	835	120	6.000	1.320
630 MA10	6	1.030	900	1.185	1.035	940	820	1.080	945	188	6.700	1.320
630 MB10	6	1.150	1.000	1.325	1.155	1.040	910	1.195	1.045	217	8.100	1.320
630 LA10	6	1.210	1.060	1.390	1.215	1.100	960	1.265	1.105	245	9.000	1.320
630 LB10	6	1.400	1.220	1.610	1.405	1.270	1.110	1.460	1.275	260	9.600	1.320
710 SA10	6	1.600	1.400	1.840	1.605	1.460	1.270	1.680	1.465	on request		1.320
710 MA10	6	2.200	1.920	2.530	2.210	2.000	1.750	2.300	2.010	on request		1.320
710 LA10	6	2.500	2.180	2.875	2.510	2.270	1.990	2.610	2.280	on request		1.320
710 LB10	6	3.090	2.700	3.555	3.105	2.810	2.450	3.230	2.820	on request		1.320
12 pole		**50Hz - 500 min^{-1}**		**60Hz - 600 min^{-1}**		**50Hz - 500 min^{-1}**		**60Hz - 600 min^{-1}**				
MJHT 630 SA12	6	650	570	750	655	590	520	680	595	133	6.000	1.100
630 MA12	6	740	640	850	740	670	590	770	670	206	6.700	1.100
630 MB12	6	820	720	945	825	750	660	865	755	238	8.100	1.100
630 LA12	6	920	800	1.060	925	830	730	955	835	269	9.000	1.100
630 LB12	6	1.100	960	1.265	1.105	1.000	870	1.150	1.005	285	9.600	1.100
710 SA12	6	1.250	1.090	1.440	1.255	1.130	990	1.300	1.135	on request		1.100
710 MA12	6	1.790	1.560	2.060	1.800	1.620	1.420	1.865	1.630	on request		1.100
710 LA12	6	2.230	1.940	2.565	2.240	2.020	1.770	2.325	2.030	on request		1.100
14 pole		**50Hz - 428 min^{-1}**		**60Hz - 514 min^{-1}**		**50Hz - 428 min^{-1}**		**60Hz - 514 min^{-1}**				
MJHT 710 SA14	6	810	705	940	820	740	645	850	740	on request		950
710 SC14	6	1.060	925	1.220	1.065	970	845	1.120	980	on request		950
710 MA14	6	1.250	1.090	1.440	1.255	1.150	1.005	1.180	1.030	on request		950
710 LA14	6	1.610	1.405	1.850	1.615	1.470	1.285	1.520	1.325	on request		950
710 LB14	6	1.750	1.530	2.010	1.755	1.630	1.425	1.650	1.440	on request		950
16 pole		**50Hz - 375 min^{-1}**		**60Hz - 450 min^{-1}**		**50Hz - 375 min^{-1}**		**60Hz - 450 min^{-1}**				
MJHT 710 SA16	6	720	630	830	725	670	585	770	670	on request		825
710 SC16	6	960	840	1.100	960	880	770	1.010	880	on request		825
710 MA16	6	1.130	985	1.290	1.125	1.030	900	1.180	1.030	on request		825
710 LA16	6	1.440	1.255	1.650	1.440	1.320	1.150	1.520	1.325	on request		825
710 LB16	6	1.570	1.370	1.800	1.570	1.440	1.255	1.650	1.440	on request		825
18 pole		**50Hz - 333 min^{-1}**		**60Hz - 400 min^{-1}**		**50Hz - 333 min^{-1}**		**60Hz - 400 min^{-1}**				
MJHT 710 SA18	6	650	565	750	655	600	525	690	600	on request		740
710 MA18	6	860	750	980	855	790	690	900	785	on request		740
710 MB18	6	1.010	880	1.160	1.015	930	810	1.070	935	on request		740
710 LA18	6	1.290	1.125	1.490	1.300	1.190	1.040	1.370	1.195	on request		740
710 LB18	6	1.430	1.250	1.640	1.430	1.310	1.145	1.500	1.310	on request		740

**: Showed data could change depending on mounting.
The rated outputs refer to the following conditions: balanced and non deforming load, altitude below 1.000 m asl, power factor from 0,8 to 1.
For values of overspeed greater than as listed, please contact MarelliMotori.

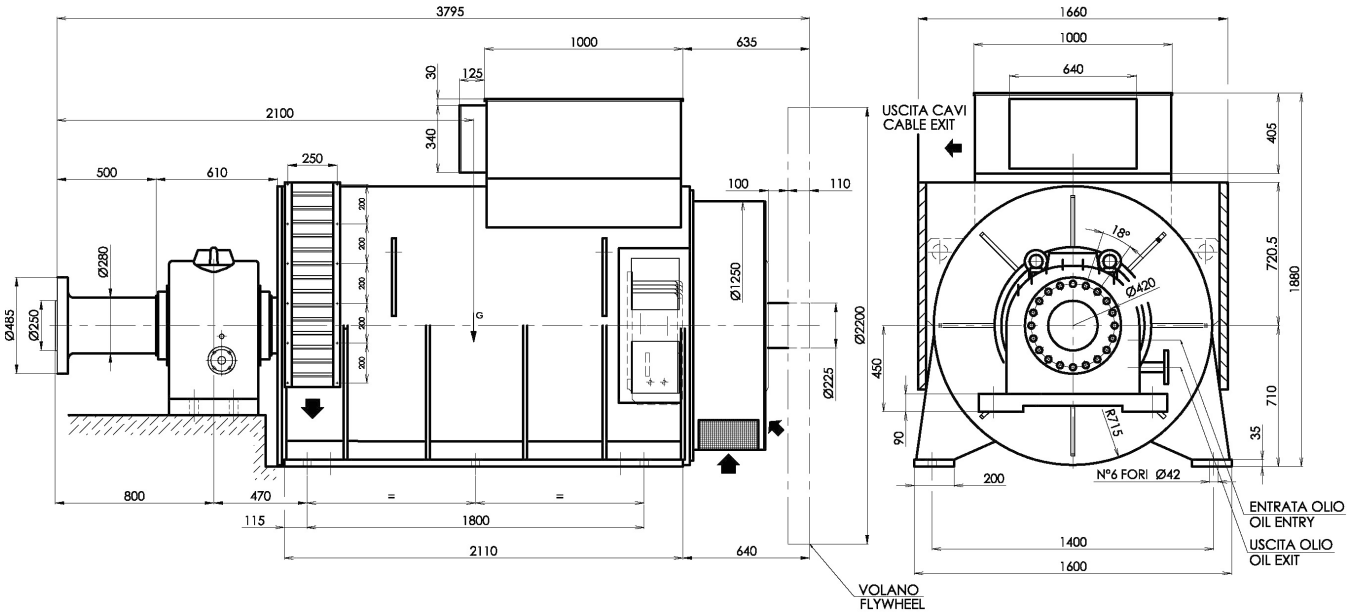

MarelliGenerators®

SYNCHRONOUS GENERATORS / OVERALL DIMENSIONS [mm]

Mounting: IM B3 - Air cooled (IC01)

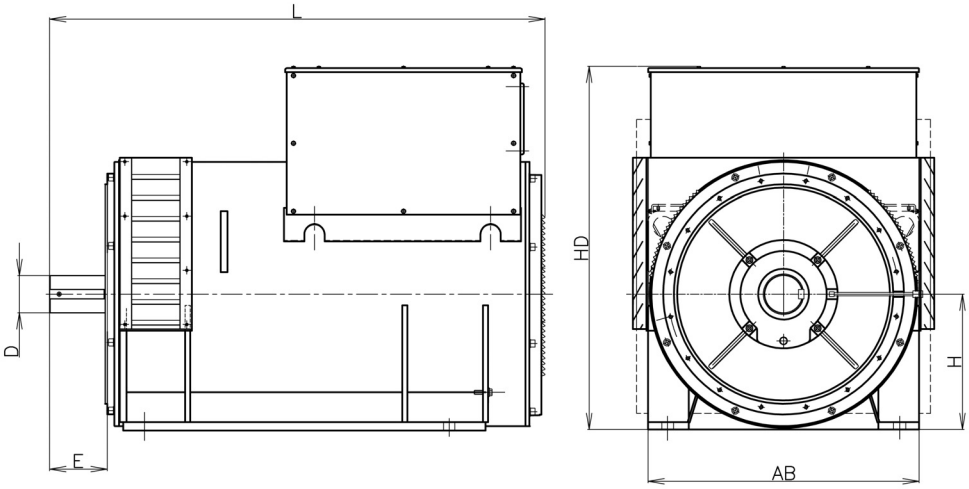

Dimension	400			450		500			560		630			710		
	S	M	L	M	L	S	M	L	M	L	S	M	L	S	M	L
H	400	400	400	450	450	500	500	500	560	560	630	630	630	710	710	710
HD	1100	1100	1100	1190	1190	1370	1370	1370	1430	1430	1580	1580	1580	1880	1880	1880
AB	800	800	800	900	900	1000	1000	1000	1100	1100	1280	1280	1280	1500	1500	1500
L	1360	1560	1760	1807	1987	1920	2170	2270	2305	2405	2150	2350	2450	2450	2650	2650
D	110	110	110	125	125	130	130	130	150	150	160	160	160	180	180	180
E	170	170	170	210	210	210	210	210	230	230	210	210	210	300	300	300

Mounting: IM V10 - Air cooled (IC01)

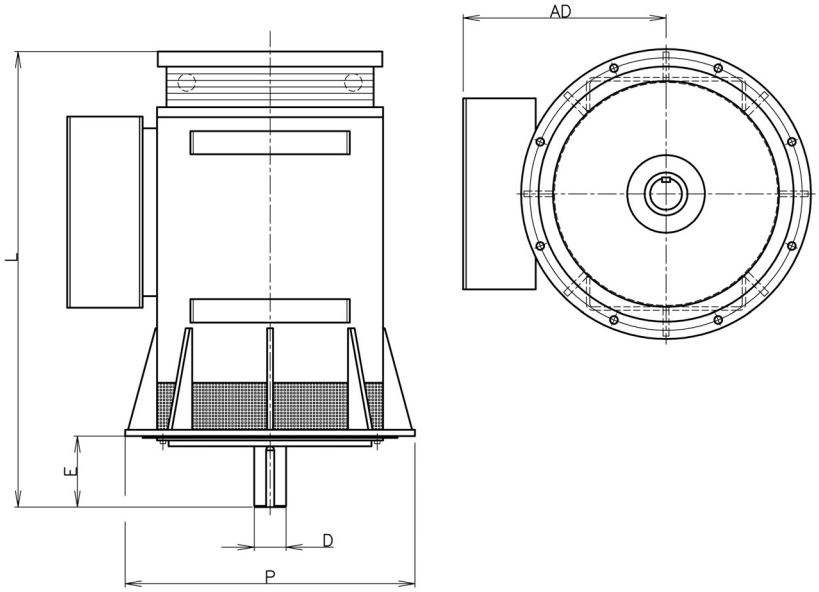

Dimension	400			450		500			560		630			710		
	S	M	L	M	L	S	M	L	M	L	S	M	L	S	M	L
P	1000	1000	1000	1150	1150	1250	1250	1250	1400	1400	1600	1600	1600	1800	1800	1800
AD	700	700	700	740	740	780	780	780	700	700	1125	1125	1125	1150	1150	1150
L	1540	1740	1940	2030	2210	2250	2500	2600	2340	2440	2430	2630	2730	2470	2670	2770
D	110	110	110	125	125	130	130	130	150	150	160	160	160	180	180	180
E	170	170	170	210	210	210	210	210	230	230	210	210	210	300	300	300

SYNCHRONOUS GENERATORS / OVERALL DIMENSIONS [mm]

Mounting: IM B3 - Air-to-water heat exchanger (IC81W)

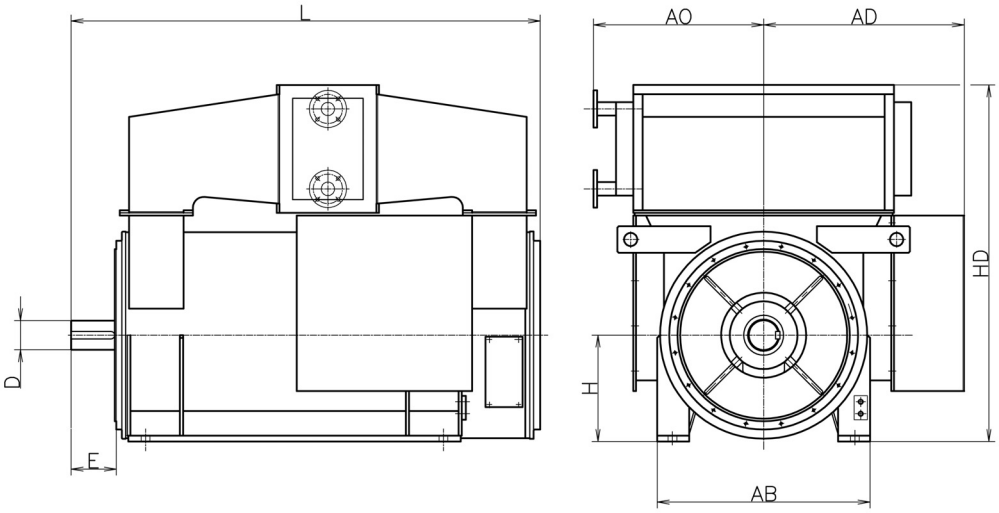

Dimension	400			500			560		630			710		
	S	M	L	S	M	L	M	L	S	M	L	S	M	L
H	400	400	400	500	500	500	560	560	630	630	630	710	710	710
HD	1340	1340	1340	1610	1610	1610	1750	1750	1880	1880	1880	2060	2060	2060
AB	800	800	800	1000	1000	1000	1100	1100	1280	1280	1280	1500	1500	1500
L	1345	1545	1745	1830	2080	2180	2180	2280	2150	2350	2450	2440	2640	2740
AO	640	640	640	685	685	685	685	685	825	825	825	915	915	915
AD	750	750	750	800	800	800	800	800	850	850	850	900	900	900
D	110	110	110	130	130	130	150	150	160	160	160	180	180	180
E	170	170	170	210	210	210	230	230	210	210	210	300	300	300

Dimensions for 450 frame size on demand

Mounting: IM V10 - Air-to-water heat exchanger (IC81W)

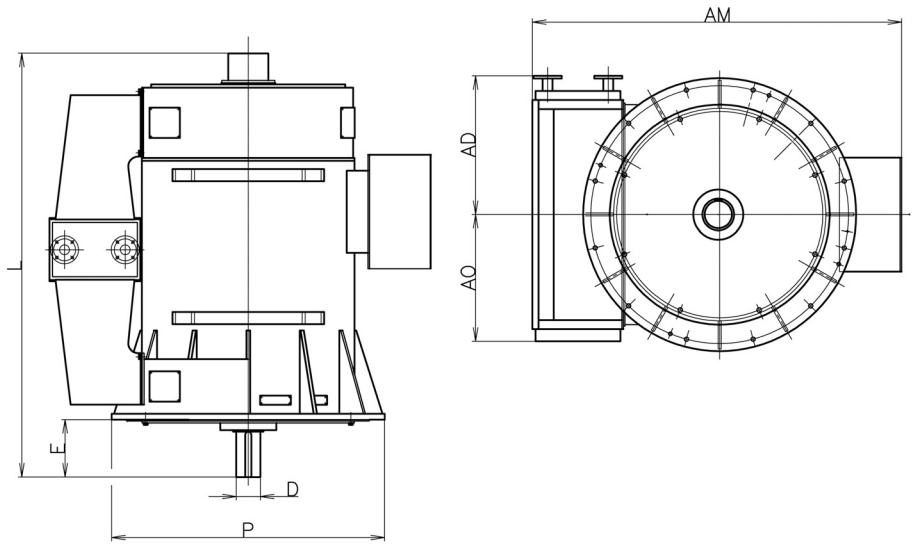

Dimension	400			500			560		630			710		
	S	M	L	S	M	L	M	L	S	M	L	S	M	L
P	1000	1000	1000	1250	1250	1250	1400	1400	1600	1600	1600	1800	1800	1800
AM	1650	1650	1650	1800	1800	1800	1950	1950	2100	2100	2100	2435	2435	2435
L	1540	1740	1940	2250	2500	2600	2340	2440	2470	2670	2770	2470	2670	2770
AO	640	640	640	685	685	685	685	685	825	825	825	915	915	915
AD	555	555	555	605	605	605	605	605	745	745	745	835	835	835
D	110	110	110	130	130	130	150	150	160	160	160	180	180	180
E	170	170	170	210	210	210	230	230	210	210	210	300	300	300

Dimensions for 450 frame size on demand

FRAME SIZES 250 - 630 ASYNCHRONOUS GENERATORS: TECHNICAL FEATURES

STANDARDS
All generators are designed according to the IEC 60034-1 and CEI EN 60034-1 standards and can be incorporated in the “CE” marked machinery.

AVAILABLE VOLTAGE
Generators can be supplied with nominal voltages from 380 V up to 690 V.
Voltages not listed can be supplied on request.

ENVIRONMENTAL CONDITIONS
Rated outputs refer to an installation height up to 1.000 m asl and to a maximum ambient temperature of 40°C. For higher altitudes and different temperature values the rated outputs must be recalculated using the factors listed in the following table.

Altitude [m asl]	Ambient temperature [°C]			
	30	40	45	50
1000	1,04	1,00	0,98	0,95
1500	1,03	0,97	0,95	0,92
2000	0,99	0,93	0,91	0,88
2500	0,95	0,90	0,88	0,86
3000	0,91	0,86	0,84	0,82

DEGREE OF PROTECTION
Standard generators are air-cooled with an IP 23 degree of protection (IC 01 cooling type). To upgrade the index to IP 44 inlet and outlet air protections are available on request (IC 01 cooling type).
To obtain a higher degree of protection (IP 44 or IP 54), generators can be supplied with an air-to-fresh water heat exchanger installed on the body of the machinery (IC 81W cooling type).

SHAFT ORIENTATION
Generators are supplied with a horizontal (IM B3) or vertical (IM V10) shaft configuration.

BEARINGS
Standard generators are supplied with grease-lubricated rolling bearings. All bearings are oversized to guarantee a minimum lifetime of 100.000 h (L_{10h} = 100.000 h), value obtained concerning to an unloaded standard shaft.

RUNNER DIRECTLY CONNECTED TO THE SHAFT
Generators can be equipped with a special shaft extension to directly connect the hydraulic turbine runner. In this configuration all bearings and the shaft are designed to withstand to axial and radial loads caused by the hydraulic thrust and by the weight of the runner. Depending on the loads applied and on the runaway speed of the runner, generators can be supplied with oil-lubricated rolling bearings or sleeve bearings.

ROTOR BALANCING
Rotors are dynamically balanced with a half key applied to the shaft extension in accordance with IEC 60034-14 to vibration grade normal (N) in standard execution. Generators can be supplied with reduced (R) or special (S) vibration levels on request.

INSULATION
Class F standard insulation system allows a maximum winding temperature rise of 105°C referring to an ambient temperature of 40°C. The windings are impregnated with polyester resin using the latest technology (VPI system). An enamel insulator (tropicalization treatment) coats all inner parts of generators in order to protect it from corrosion.

TEMPERATURE SENSORS
Generators are equipped with three PTC thermistors (one for each phase) to supervise the stator winding temperature. Generators can be supplied with a PT100 for each bearing in order to control their temperature. To control inlet and outlet air temperature, PT100’s are installed both on the NDE side and on the DE side on request. If the air-to-water heat exchanger is installed, it’s possible to control the inlet and outlet water temperature by PT100’s and to install a flow meter to check presence or absence of water.

FLYWHEEL
When the requested inertial momentum is higher than the actual inertial momentum of the generator, it is possible to extend the shaft on the NDE side in order to connect a flywheel (not supplied).

TERMINAL BOXES
Generators are supplied with terminal boxes of appropriate dimensions in order to allow easy connection to the main leads. All the generators have six leads in the terminal box.
An additional terminal box for the leads of the auxiliary devices is available on request.
Generators can be equipped with current transformers both on the main leads and the star point leads.
The standard index of protection for the terminal boxes is IP 55; the IP 56 can be installed on request.

EQUIPMENT

Standard
- Class F insulation
- VPI impregnation type
- Windings protected against corrosion (tropicalization)
- Six-leads stator winding into the terminal box
- N° 3 PTC into the stator winding
- IP 23 index of protection
- IP 55 index of protection for the terminal box
- Bearings: more than 100.000 h life time

Electric options
- Class H insulation type
- N° 3 PT100 into the stator winding
- N° 1 PT100 on each bearing
- Anti-condensation heaters
- In-terminal-box measurement transformers
- Encoder
- Tachometric dynamo

Mechanical options
- Inlet and outlet air filters (IP 44)
- Air-to-fresh water heat exchanger top mounted on generator (IP 44 or IP 55)
- IP 56 terminal box
- Auxiliary leads into a separate terminal box
- Runner directly connected to the shaft of the generator
- Sleeve bearings
- Shaft extension
- Insulated NDE side bearing
- Arrangement for speed sensors
- Arrangement for vibration sensor on each bearing

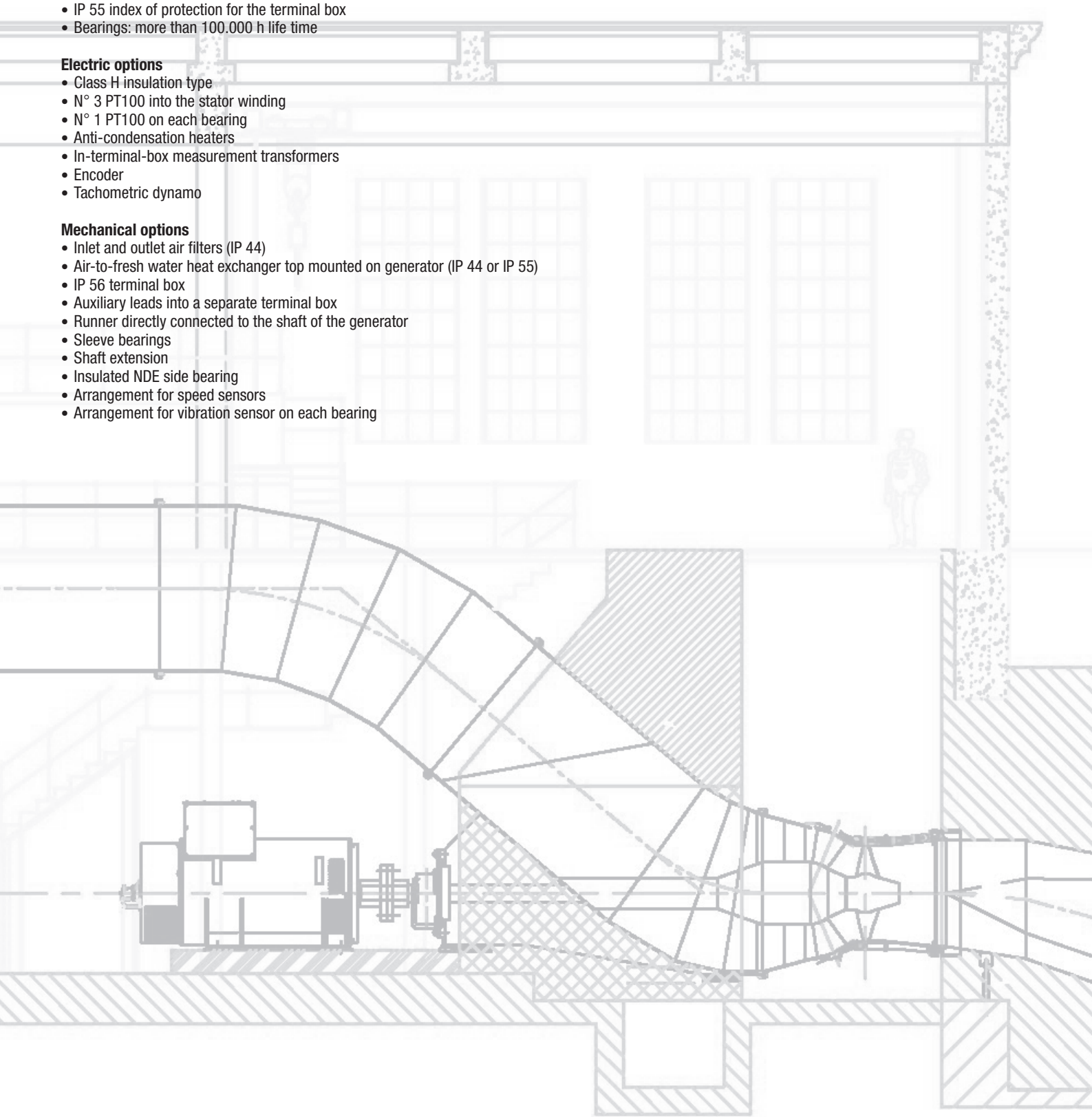

ASYNCHRONOUS GENERATORS / Insulations class F - IP 23 - IC 01

Power Pn kW	Type	Speed rpm min-1	Voltage Vn V	Current In A	Torque Tn N m	Efficiency [%] 4/4	Efficiency [%] 3/4	Efficiency [%] 2/4	Power factor 4/4	Power factor 3/4	Power factor 2/4	Moment of Inertia J kg m2	Weight IM B3 kg	Max overspeed rpm min-1
4 poles	**1500 min-1 - 50Hz**													
55	C3G **250 S4**	1.535	400	92	372	92,0	92,0	90,5	0,86	0,84	0,79	0,5	275	3.000
75	**250 M4**	1.520	400	126	509	92,5	92,3	91,0	0,86	0,83	0,75	0,8	350	3.000
90	**280 S4**	1.520	400	148	608	93,0	93,0	92,0	0,88	0,86	0,79	0,9	405	3.000
110	**280 M4**	1.520	400	181	743	93,0	93,0	92,0	0,88	0,86	0,79	1,1	445	3.000
132	**315 S4**	1.520	400	214	883	93,9	94,3	94,1	0,89	0,88	0,84	1,7	570	2.750
160	**315 MA4**	1.520	400	263	1.067	94,2	94,5	94,1	0,88	0,87	0,81	2,1	705	2.750
200	**315 MB4**	1.517	400	328	1.332	94,5	94,9	94,6	0,88	0,87	0,83	2,5	750	2.750
250	**315 MD4**	1.517	400	401	1.656	95,0	95,3	95,0	0,90	0,88	0,83	3,1	850	2.750
315	**315 ME4**	1.517	400	506	2.085	95,1	95,2	95,0	0,90	0,88	0,83	3,3	930	2.750
315	**355 LA4**	1.510	400	511	2.089	95,4	95,3	94,5	0,89	0,87	0,82	6,6	1.150	2.750
400	**355 LB4**	1.510	400	642	2.637	95,9	95,8	94,8	0,90	0,89	0,85	8,0	1.260	2.750
450	**355 LC4**	1.508	400	731	2.965	96,1	96,0	95,3	0,89	0,87	0,86	10,3	1.450	2.750
550	**355 LD4**	1.508	400	893	3.620	96,2	96,0	95,4	0,89	0,87	0,81	12,0	1.670	2.750
700	C4G **400 LA4**	1.507	400	1.137	4.573	96,9	96,9	96,4	0,89	0,85	0,70	12,2	2.333	2.750
800	**400 LB4**	1.507	400	1.299	5.221	97,0	97,0	96,5	0,89	0,84	0,66	13,7	2.491	2.750
900	**400 LC4**	1.506	400	1.445	5.871	97,1	97,0	96,5	0,90	0,88	0,83	15,7	2.691	2.750
1100	**450 LA4**	1.507	690	1.035	7.179	97,0	96,8	96,2	0,89	0,88	0,83	28,9	3.666	2.500
1250	**450 LB4**	1.507	690	1.164	8.149	97,1	97,0	96,4	0,90	0,89	0,85	33,3	3.889	2.500
1400	**450 LC4**	1.506	690	1.318	9.133	97,1	97,0	96,1	0,89	0,87	0,81	37,6	4.271	2.500
1600	**500 LA4**	1.505	690	1.541	10.445	97,1	96,8	96,0	0,87	0,85	0,80	53,0	5.353	2.500
1800	**500 LB4**	1.505	690	1.694	11.715	97,4	97,3	96,7	0,89	0,89	0,86	59,9	5.728	2.500
2000	**500 LC4**	1.505	690	1.926	13.030	97,3	97,0	96,3	0,87	0,86	0,81	68,8	6.003	2.500
6 poles	**1000 min-1 - 50Hz**													
110	C3G **315 MA6**	1.010	400	187	1.115	93,3	93,5	93,0	0,85	0,85	0,81	2,9	750	2.550
132	**315 MB6**	1.013	400	224	1.331	93,5	93,8	93,2	0,85	0,85	0,81	4,1	850	2.550
160	**315 MC6**	1.013	400	272	1.609	93,7	94,0	93,4	0,85	0,84	0,80	5,1	920	2.550
225	**355 LA6**	1.007	400	383	2.241	95,2	95,1	94,3	0,85	0,82	0,74	8,2	1.160	2.550
270	**355 LB6**	1.007	400	459	2.681	95,5	95,4	94,6	0,85	0,82	0,74	10,6	1.340	2.550
315	**355 LC6**	1.007	400	529	3.121	95,7	95,6	94,9	0,86	0,83	0,75	12,3	1.460	2.550
375	**355 LD6**	1.006	400	638	3.719	95,7	95,5	94,8	0,85	0,82	0,73	13,7	1.800	2.550
540	C4G **400 LA6**	1.010	400	907	5.313	96,0	96,2	96,0	0,86	0,86	0,82	19,0	2.278	2.550
610	**400 LB6**	1.010	400	1.025	5.989	96,2	96,4	96,1	0,86	0,86	0,82	21,6	2.421	2.550
670	**400 LC6**	1.010	400	1.113	6.572	96,3	96,4	96,1	0,87	0,86	0,81	23,6	2.564	2.550
720	**400 LD6**	1.009	400	1.196	7.062	96,4	96,5	96,2	0,87	0,86	0,82	25,5	2.732	2.550
800	**450 LA6**	1.006	400	1.344	7.854	96,6	96,5	96,0	0,86	0,85	0,80	38,1	3.569	2.000
900	**450 LB6**	1.006	400	1.512	8.826	96,7	96,6	96,1	0,86	0,85	0,80	43,5	3.843	2.000
1000	**450 LC6**	1.006	400	1.680	9.797	96,8	96,7	96,2	0,86	0,85	0,80	48,8	4.128	2.000
1200	**500 LA6**	1.005	690	1.169	11.743	97,0	96,8	96,3	0,86	0,85	0,80	66,2	5.039	1.800
1400	**500 LB6**	1.005	690	1.348	13.686	97,1	97,0	96,4	0,87	0,86	0,80	77,1	5.525	1.800
1600	**500 LC6**	1.005	690	1.541	15.642	97,1	97,0	96,5	0,87	0,86	0,80	88,9	6.015	1.800
2000	**630 LA6**	1.005	690	1.883	19.532	97,2	97,1	96,6	0,89	0,88	0,86	154,3	7.476	1.800
2300	**630 LB6**	1.004	690	2.165	22.461	97,3	97,2	96,6	0,89	0,88	0,86	178,7	8.271	1.800
2700	**630 LC6**	1.004	690	2.513	26.340	97,4	97,3	96,8	0,90	0,89	0,87	206,9	8.981	1.800

ASYNCHRONOUS GENERATORS / Insulations class F - IP 23 - IC 01

Power Pn kW	Type	Speed rpm min-1	Voltage Vn V	Current In A	Torque Tn N m	Efficiency [%] 4/4	Efficiency [%] 3/4	Efficiency [%] 2/4	Power factor 4/4	Power factor 3/4	Power factor 2/4	Moment of Inertia J kg m2	Weight IM B3 kg	Max overspeed rpm min-1
8 poles	**750 min-1 - 50Hz**													
90	**C3G 315 MA8**	765	400	163	1.201	93,5	93,6	93,0	0,80	0,75	0,66	3,0	780	1.950
110	**315 MB8**	765	400	196	1.465	93,7	93,9	93,1	0,81	0,76	0,67	3,7	800	1.950
132	**315 MC8**	764	400	230	1.757	93,9	94,0	93,1	0,83	0,78	0,69	4,4	830	1.950
160	**355 LA8**	757	400	282	2.142	94,2	94,1	93,2	0,82	0,77	0,68	9,6	1.160	1.950
200	**355 LB8**	756	400	352	2.667	94,7	94,5	93,6	0,82	0,77	0,67	12,3	1.340	1.950
250	**355 LC8**	756	400	441	3.327	94,9	94,8	93,9	0,82	0,78	0,68	14,2	1.460	1.950
280	**355 LD8**	756	400	493	3.722	95,0	94,8	94,0	0,82	0,78	0,68	15,9	1.570	1.950
315	**400 LA8**	757	400	542	4.213	94,3	94,1	92,9	0,84	0,82	0,76	20,5	1.900	1.950
375	**400 LB8**	757	400	638	5.000	94,6	94,4	93,4	0,85	0,83	0,77	24,5	2.100	1.950
450	**400 LC8**	758	400	765	5.979	94,8	94,7	93,9	0,85	0,84	0,78	27,5	2.300	1.950
500	**400 LD8**	758	400	840	6.637	94,9	94,9	94,3	0,86	0,85	0,79	30,6	2.450	1.950
580	**C4G 450 LA8**	756	400	986	7.624	96,0	95,9	95,2	0,85	0,83	0,77	44,1	3.341	1.500
650	**450 LB8**	756	400	1.105	8.535	96,1	96,0	95,3	0,85	0,83	0,77	50,3	3.578	1.500
730	**450 LC8**	756	400	1.241	9.576	96,2	96,1	95,5	0,85	0,84	0,77	56,5	3.812	1.500
850	**500 LA8**	755	400	1.462	11.141	96,4	96,3	95,6	0,84	0,82	0,77	78,0	5.058	1.400
1000	**500 LB8**	755	400	1.720	13.053	96,8	96,6	96,0	0,84	0,82	0,76	90,8	5.533	1.400
1150	**500 LC8**	754	400	1.978	15.016	96,9	96,8	96,2	0,84	0,82	0,76	104,7	6.045	1.400
1350	**630 LA8**	754	690	1.300	17.627	96,9	96,8	96,2	0,87	0,86	0,82	201,8	7.362	1.300
1500	**630 LB8**	754	690	1.444	19.566	97,0	96,8	96,1	0,87	0,86	0,80	233,8	8.078	1.300
1800	**630 LC8**	753	690	1.733	23.486	97,1	97,0	96,4	0,87	0,86	0,81	270,7	8.911	1.300
2000	**710 LA8**	752	690	1.948	26.023	97,5	97,3	97,6	0,86	0,83	0,76	455,0	11.067	-
2400	**710 LB8**	752	690	2.311	31.164	97,7	97,5	97,0	0,87	0,85	0,78	535,0	12.320	-
2800	**710 LC8**	752	690	2.696	36.357	97,7	97,6	97,1	0,87	0,85	0,79	632,0	13.662	-
10 poles	**600 min-1 - 50Hz**													
132	**C3G 355 LA10**	610	400	235	2.207	93,6	93,9	93,6	0,81	0,79	0,71	9,6	1.160	1.525
160	**355 LB10**	609	400	285	2.663	94,2	94,3	93,7	0,81	0,77	0,68	12,3	1.340	1.525
180	**355 LC10**	609	400	317	2.993	94,3	94,5	94,0	0,82	0,78	0,69	14,2	1.460	1.525
200	**355 LD10**	609	400	352	3.318	94,5	94,6	94,1	0,82	0,78	0,69	15,9	1.570	1.525
240	**400 LA10**	607	400	439	4.003	94,3	94,3	93,5	0,79	0,75	0,67	20,5	1.900	1.525
280	**400 LB10**	607	400	512	4.666	94,4	94,5	93,7	0,79	0,76	0,67	24,5	2.110	1.525
315	**400 LC10**	606	400	576	5.235	94,8	94,7	93,9	0,79	0,75	0,66	27,5	2.280	1.525
350	**400 LD10**	606	400	640	5.811	94,9	94,8	94,0	0,79	0,75	0,66	30,6	2.450	1.525
450	**C4G 450 LA10**	606	400	783	7.418	95,5	95,5	94,9	0,83	0,82	0,75	50,7	3.267	1.500
500	**450 LB10**	605	400	881	8.239	95,7	95,6	94,8	0,82	0,80	0,72	57,8	3.507	1.500
570	**450 LC10**	605	400	1.005	9.382	95,8	95,7	94,9	0,82	0,80	0,72	65,0	3.760	1.500
650	**500 LA10**	604	400	1.160	10.717	95,8	95,5	94,5	0,81	0,78	0,69	97,0	4.924	1.300
750	**500 LB10**	604	400	1.322	12.340	96,0	95,7	94,8	0,82	0,79	0,70	112,9	5.404	1.300
880	**500 LC10**	604	400	1.532	14.448	96,2	96,0	95,3	0,83	0,80	0,73	130,2	5.915	1.300
1050	**630 LA10**	604	400	1.806	17.186	96,5	96,3	95,6	0,84	0,82	0,75	212,5	7.232	1.100
1200	**630 LB10**	604	400	2.040	19.621	96,6	96,5	96,0	0,85	0,83	0,77	246,2	7.880	1.100
1400	**630 LC10**	604	400	2.380	22.867	96,7	96,6	96,1	0,85	0,83	0,77	285,0	8.682	1.100
1500	**710 LA10**	603	400	1.478	24.415	97,2	97,1	96,7	0,85	0,84	0,78	485,0	10.943	-
1800	**710 LB10**	603	400	1.753	29.268	97,3	97,3	96,9	0,86	0,85	0,80	570,0	12.144	-
2100	**710 LC10**	603	400	2.022	34.111	97,4	97,4	97,0	0,87	0,85	0,80	673,0	13.523	-

ASYNCHRONOUS GENERATORS / Insulations class F - IP 23 - IC 01

Power Pn kW	Type	Speed rpm min-1	Voltage Vn V	Current In A	Torque Tn N m	Efficiency [%] 4/4	Efficiency [%] 3/4	Efficiency [%] 2/4	Power factor 4/4	Power factor 3/4	Power factor 2/4	Moment of Inertia J kg m2	Weight IM B3 kg	Max overspeed rpm min-1
12 poles 500 min-1 - 50Hz														
110	C3G 355 LA12	508	400	224	2.233	92,6	92,7	92,0	0,71	0,67	0,56	9,6	1.160	1.300
132	355 LB12	507	400	269	2.667	93,2	93,1	92,2	0,71	0,65	0,54	12,3	1.340	1.300
160	355 LC12	507	400	326	3.233	93,2	93,3	92,4	0,71	0,66	0,54	14,2	1.460	1.300
180	355 LD12	508	400	356	3.618	93,5	93,6	92,9	0,73	0,68	0,57	15,9	1.570	1.300
200	400 LA12	507	400	391	4.033	93,4	93,6	92,9	0,74	0,71	0,61	20,5	1.900	1.300
225	400 LB12	507	400	439	4.517	93,8	93,9	93,1	0,74	0,70	0,60	24,5	2.110	1.300
250	400 LC12	507	400	488	5.009	94,0	94,1	93,4	0,74	0,71	0,61	27,5	2.280	1.300
280	400 LD12	507	400	547	5.604	94,1	94,2	93,5	0,74	0,71	0,61	30,6	2.450	1.300
340	C4G 450 LA12	505	400	614	6.768	94,9	94,7	93,8	0,80	0,76	0,67	58,1	3.230	1.300
380	450 LB12	505	400	686	7.548	95,1	95,0	94,2	0,80	0,77	0,70	66,2	3.469	1.300
430	450 LC12	505	400	777	8.542	95,1	94,9	94,0	0,80	0,78	0,70	74,4	3.690	1.300
480	500 LA12	504	400	856	9.524	95,4	95,2	94,4	0,81	0,78	0,70	103,0	4.924	1.200
580	500 LB12	504	400	1.035	11.484	95,6	95,4	94,6	0,81	0,78	0,70	119,9	5.391	1.200
650	500 LC12	504	400	1.160	12.856	95,7	95,6	94,8	0,81	0,78	0,70	138,2	5.906	1.200
750	630 LA12	504	400	1.322	14.788	96,0	95,8	95,0	0,82	0,80	0,72	223,6	7.207	1.100
850	630 LB12	504	400	1.498	16.742	96,1	95,9	95,1	0,82	0,80	0,72	259,0	7.887	1.100
1000	630 LC12	503	400	1.762	19.695	96,3	96,0	95,2	0,82	0,80	0,71	299,9	8.700	1.100
1150	710 LA12	503	400	1.932	22.626	96,4	96,2	95,5	0,86	0,84	0,78	527,0	10.871	-
1350	710 LB12	503	400	2.242	26.451	96,8	96,9	96,5	0,87	0,87	0,81	620,0	12.073	-
1650	710 LC12	503	400	2.710	32.295	96,9	97,0	96,7	0,88	0,87	0,83	732,0	13.443	-
14 poles 428,57 min-1 - 50Hz														
150	C3G 400 LA14	436	400	289	3.502	93,8	94,2	94,1	0,75	0,73	0,62	28,0	1.950	1.100
180	400 LB14	435	400	347	4.203	94,0	94,3	94,1	0,75	0,75	0,62	35,0	2.120	1.100
200	400 LC14	435	400	385	4.655	94,3	94,5	94,2	0,75	0,73	0,62	40,0	2.300	1.100
230	400 LD14	435	400	443	5.342	94,5	94,7	94,3	0,75	0,73	0,62	45,0	2.550	1.100
260	C4G 450 LA14	434	400	488	6.048	94,5	94,4	93,4	0,77	0,72	0,61	58,1	3.286	1.100
300	450 LB14	434	400	556	6.964	94,7	94,6	93,8	0,78	0,73	0,63	66,2	3.542	1.100
330	450 LC14	434	400	619	7.652	94,8	94,7	93,7	0,77	0,72	0,61	74,4	3.802	1.100
380	500 LA14	433	400	732	8.860	94,5	94,1	92,8	0,75	0,71	0,60	103,0	4.869	1.000
440	500 LB14	433	400	837	10.237	94,7	94,3	93,1	0,76	0,71	0,60	119,9	5.345	1.000
500	500 LC14	432	400	963	11.660	94,7	94,2	92,8	0,75	0,70	0,58	138,2	5.857	1.000
580	630 LA14	432	400	1.075	13.454	95,2	94,8	93,5	0,78	0,74	0,63	223,6	7.168	900
680	630 LB14	432	400	1.244	15.741	95,4	95,1	94,0	0,79	0,75	0,65	259,0	7.852	900
780	630 LC14	432	400	1.427	18.018	95,6	95,2	94,1	0,79	0,75	0,65	299,9	8.653	900
900	710 LA14	431	400	1.626	20.687	96,3	96,0	95,0	0,80	0,76	0,65	527,0	10.680	-
1050	710 LB14	431	400	1.897	24.109	96,4	96,1	95,1	0,80	0,76	0,65	620,0	11.916	-
1200	710 LC14	431	400	2.141	27.496	96,6	96,4	95,6	0,81	0,78	0,68	734,0	13.307	-

ASYNCHRONOUS GENERATORS - OVERALL DIMENSIONS [mm]

Air cooled (IC01) - Horizontal mounting

Dimension (mm)	250		280		315	355	400	450	500	630
	S	M	S	M						
H	250	250	280	280	315	355	400	450	500	630
HD	573	629	701	701	888	1000	1206	1320	1402	1656
AB	460	480	520	520	600	800	890	900	1040	1300
L	808	789	901	901	1125	1525	1790	2160	2145	2200
D	75	75	80	80	90	100	110	120	130	160
E	140	140	170	170	170	210	210	210	250	300

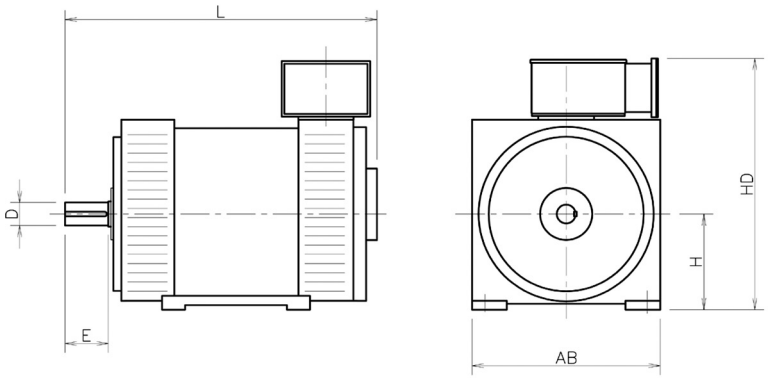

Air cooled (IC01) - Vertical mounting

Dimension (mm)	250		280		315	355	400	450	500	630
	S	M	S	M						
P	660	660	660	660	800	800	1000	1150	1150	1600
AD	858	858	969	969	550	685	750	835	830	1080
L	323	379	421	421	1115	1590	1840	2300	2095	2500
D	75	75	80	80	90	100	110	120	130	160
E	140	140	170	170	170	210	210	210	250	300

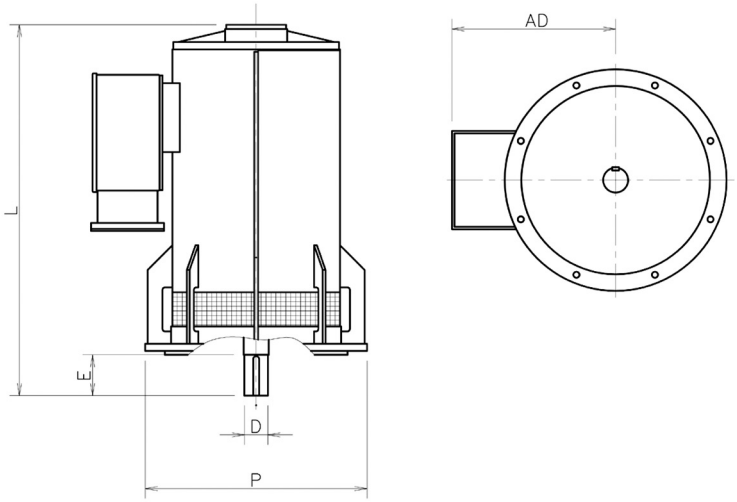

Air-to-water heat exchanger (IC81W) - Horizontal mounting

Dimension (mm)	400	450	500	630
H	400	450	500	630
HD	1430	1320	1630	2120
AB	890	900	1040	1300
L	1672	2160	2100	2220
AO	640	700	825	915
AD	860	835	1030	1300
D	110	120	130	160
E	210	210	250	300

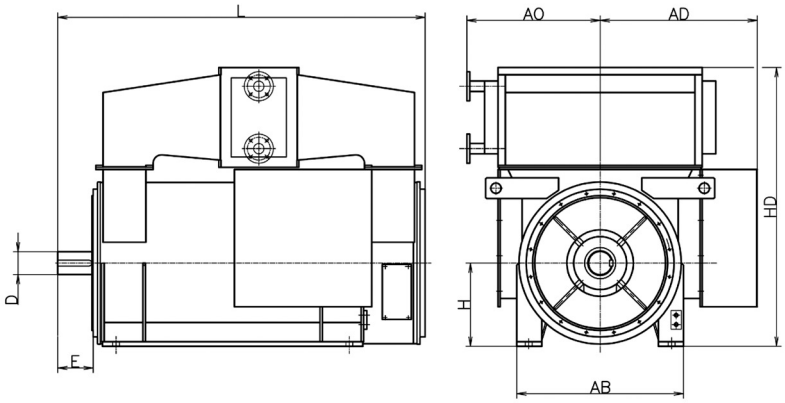

Air-to-water heat exchanger (IC81W) - Vertical mounting

Dimension (mm)	355	400	450	500	630
P	800	1150	1150	1400	1600
L	1665	1900	2300	2150	2300
AO	460	640	700	825	915
AD	720	860	835	1030	1300
D	100	110	120	130	160
E	210	210	210	250	300

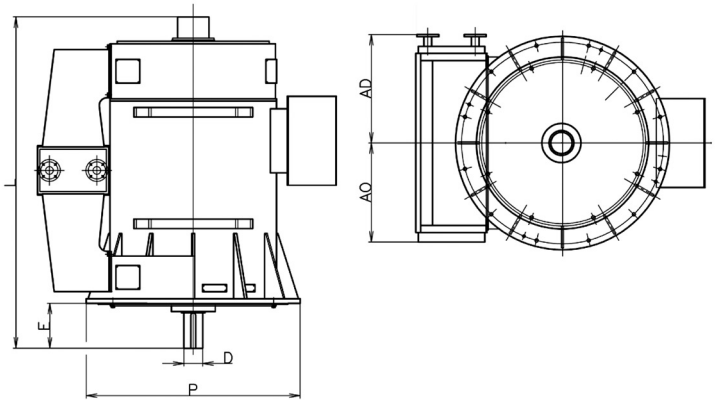

MarelliGenerators®

MarelliGenerators®

HEADQUARTERS

Marelli Motori S.p.A.
Via Sabbionara, 1
36071 Arzignano (VI) - Italy
(T) +39 0444 479.711
(F) +39 0444 479.888
www.marellimotori.com
sales@marellimotori.com

ITALIAN BRANCHES

Milan
Via Cesare Cantù, 29
20092 Cinisello Balsamo (MI) - Italy
(T) +39 02 660.131.66
(F) +39 02 660.134.83
milan@marellimotori.com

Florence
Via Panciatichi, 37/2
50127 Firenze - Italy
(T) +39 055 431.838
(F) +39 055 433.351
florence@marellimotori.com

MARELLI MOTORI OVERSEAS COMPANIES

ASIA PACIFIC

Marelli Asia Pacific Sdn Bhd
Lot PT 5038-5041 Jalan Teluk Datuk 28/40
Off Persiaran Sepang, Seksyen 28,
40400 Shah Alam, Selangor D.E.
Malaysia
(T) +60 3 5192 7213
(F) +60 3 5192 6293
asiapacific@marellimotori.com

CENTRAL EUROPE

Marelli Central Europe Gmbh
Heilswannenweg 50
31008 Elze
Germany

(T) +49 5068 462 400
(F) +49 5068 462 409
germany@marellimotori.com

GREAT BRITAIN

Marelli UK, LTD
Meadow Lane
Loughborough
Leicester LE111NB
UK
(T) +44 1509 615 518
(F) +44 1509 615 514
uk@marellimotori.com

SOUTH AFRICA

Marelli Electrical Machines South Africa (Pty) Ltd
Unit 4, 55 Activia Rd - Activia Park
Elandsfontein,
1406 Gauteng
Republic of South Africa
(T) +27 11 822 5566
(F) +27 11 828 8089
southafrica@marellimotori.com

SPAIN

Representative Office
Calle Constanza 5
08029 Barcelona
Spain

(T) +34 6644641219
(F) +34 93 4196 094
spain@marellimotori.com

USA

Marelli USA, Inc
1620 Danville Road
PO Box 410
Harrodsburg, KY 40330
USA
(T) +1 859 734 2588
(F) +1 859 7340629
usa@marellimotori.com

Grafiche Marcolin Schio 0511

SIN.CT.027.4 GB