Three Phase Synchronous Generators

MJB SERIES
160 - 200 FRAME SIZES

MarelliGenerators®

SIN.CT.030.0 GB

STANDARDS

The MJB generator series is designed in compliance with: BS EN 60034; BS 4999-5000; VDE 0530; NEMA MG 1.22 and bears the CE marking.

EXCITATION SYSTEM

The generators are self-excited by means of a brushless type excitation system.
The generators are equipped with an AVR type Mark V. The voltage stability is maintained within ±0,5% of the nominal value in steady condition with balanced and non distorting load. The Mark V operates at 50 and 60 Hz frequency and it is equipped with a radio interference filter.
This regulator offers a low speed protection and over-excitation protection.

Auxiliary winding

The excitation system of generators is fed by an auxiliary winding which gives a better response to the variation in loads and sustains the power supply in the case of a short-circuit.

Manual Voltage Regulation

Available within ±5% of the rated value by means of a potentiometer placed inside the voltage regulator.
Remote voltage sensing is possible by means of an external potentiometer, which can be supplied on request.

THREE PHASE SHORT CIRCUIT CURRENT

Generators with auxiliary winding ensure a three phase short-circuit current (Icc) higher than 3 times the rated current (In): Icc > 3 In.

VOLTAGE AND FREQUENCY

Generators can operate at 50 and 60 Hz.

Frame Size [mm]	Connection	Voltage [V]	
		50 Hz	60 Hz
160 ÷ 200	Series star	380 - 440	416 - 480
	Parallel star	190 - 220	208 - 240
	Series delta	220 - 254	240 - 277

AUTOMATIC VOLTAGE REGULATOR (AVR) SPECIFICATIONS

The generators are equipped with the following AVR set.

Model	MARK V
Code	M16FA655A
AVR supply	Auxiliary winding / Mains
Voltage sensing	Single phase

Voltage remote control	Available
Radio interference suppressor	Included
Standard protection	Over-excitation
Limiters	Under-frequency

WINDINGS

The generators are supplied with 2/3 pitch winding to reduce the voltage harmonic content in application with non-linear loads. The no-load voltage waveform is sinusoidal with a residual harmonic less than 2%. The Total Harmonic Distortion (THD) is less than 2%. The Telephonic Harmonic Factor (THF) is less than 2% as defined by BS 4999 part 40. The Radio Interference suppression complies to grade N of VDE 0875.

OVERLOADS

The overloads (only for continuous duty) are:
10% for 1 hour;
15% for 10 minutes;
30% for 4 minutes;
50% for 2 minutes.
These overloads must be followed by at least 6 hours of running at nominal load or less. No overload are allowed in stand-by duty.

SINGLE PHASE OPERATION

Three phase (12-wire) wound generators can be reconnected and derated to 66% for single phase operation (with a zig-zag connection).
Otherwise generators with dedicated (4-wire) single phase windings can be supplied on request.
The following derating factors must be applied to the corresponding configurations:

Connection	Star series	Delta series	Star parallel	Zig - zag
K factor (L - L)	0,60	0,50	0,60	0,66
K factor (L - N)	0,33	-	0,33	0,33

INSULATION, IMPREGNATION AND PROTECTIVE TREATMENT OF WINDINGS

The insulation is H class. Generators are impregnated with high grade resin and a further protective treatment is applied on the whole range, making the generators suitable for harsh environment conditions.

PROTECTION DEGREE

The standard protection degree is IP 23.

ROTOR BALANCING, BEARINGS & OVERSPEED

The rotors are dynamically balanced and are fitted with sealed-for-life ball bearings on single and double bearing configurations. The max overspeed allowed is 1,5 times the rated speed (referred to 50 Hz).

INDUSTRIAL APPLICATION / LOW VOLTAGE

Type	Leads	Power rating [kVA] Temp. rise / Ambient temp. [°C] Continuous duty 125/40 ΔT cl. H	Continuous duty 105/40 ΔT cl. F	Stand by 163/27	Stand by 150/40	Efficiency 4/4 pf = 0.8 125/40 [%]	Inertia B3 Approx. J [kg m²]	Weight B3 Approx. [kg]
4 poles		**400 V @ 50 Hz - 1.500 rpm - Three Phase**						**IP23**
MJB 160 XA4	12	14	13	15	14	85,0	0,098	109
MJB 160 SA4	12	17	16	19	18	85,6	0,109	129
MJB 160 SB4	12	20	18	22	21	87,4	0,124	140
MJB 160 SC4	12	23	21	25	24	87,5	0,135	150
MJB 160 MA4	12	28	26	31	30	88,2	0,160	178
MJB 160 MB4	12	32	29	35	34	88,3	0,170	188
MJB 200 SA4	12	42	38	46	44	88,5	0,275	219
MJB 200 SB4	12	50	45	55	53	88,7	0,301	225
MJB 200 MA4	12	62	57	68	66	90,1	0,361	264
MJB 200 MB4	12	75	69	82	80	90,5	0,426	305
4 poles		**480 V @ 60 Hz - 1.800 rpm - Three Phase**						**IP23**
MJB 160 XA4	12	17	15	18	17	85,8	0,098	109
MJB 160 SA4	12	21	20	24	23	86,4	0,109	129
MJB 160 SB4	12	25	23	27	26	88,2	0,124	140
MJB 160 SC4	12	30	27	33	32	88,3	0,135	150
MJB 160 MA4	12	34	31	38	36	89,2	0,160	178
MJB 160 MB4	12	40	37	44	42	89,1	0,170	188
MJB 200 SA4	12	51	47	56	54	89,5	0,275	219
MJB 200 SB4	12	60	55	66	64	89,3	0,301	225
MJB 200 MA4	12	76	70	84	81	90,7	0,361	264
MJB 200 MB4	12	90	82	115	95	90,9	0,426	305

Ratings refer to following conditions: balanced non-deforming load, altitude 1.000 m a.s.f., minimum power factor 0,8

OPERATING CONDITIONS

Transient ratings

The voltage drop due to the application of full load at 0,8 power factor inductive on the generators varies between 16 and 20% of the rated voltage: the output voltage recovers to within 3% of the rated value in less than 0,3 seconds.

Altitude

The rated outputs refer to installation up to 1.000 m a.s.l.
Above this level the following derating factors must be applied.

Altitude [m a.s.l.]	< 1.000	< 1.500	< 2.000	< 2.500	< 3.000
K factor	1,00	0,96	0,93	0,90	0,86

Ambient temperature

The rated outputs given in this catalogue are based on a maximum ambient temperature of 40°C.
When operating at different ambient temperatures the output rating can be obtained by applying the factors as in the following table.

Ambient Temperature [°C]	30	35	40	45	50	55
K factor	1,04	1,00	1,00	0,96	0,93	0,90

Power factor

The nominal power factor is 0.8 lagging.
For different power factor values the following derating factors must be applied.

Power Factor	1	0,8	0,7	0,6	0,5	0,3	0
K factor	1,00	1,00	0,93	0,88	0,84	0,82	0,80

DIMENSIONS

SINGLE BEARING 160 FRAME SIZE

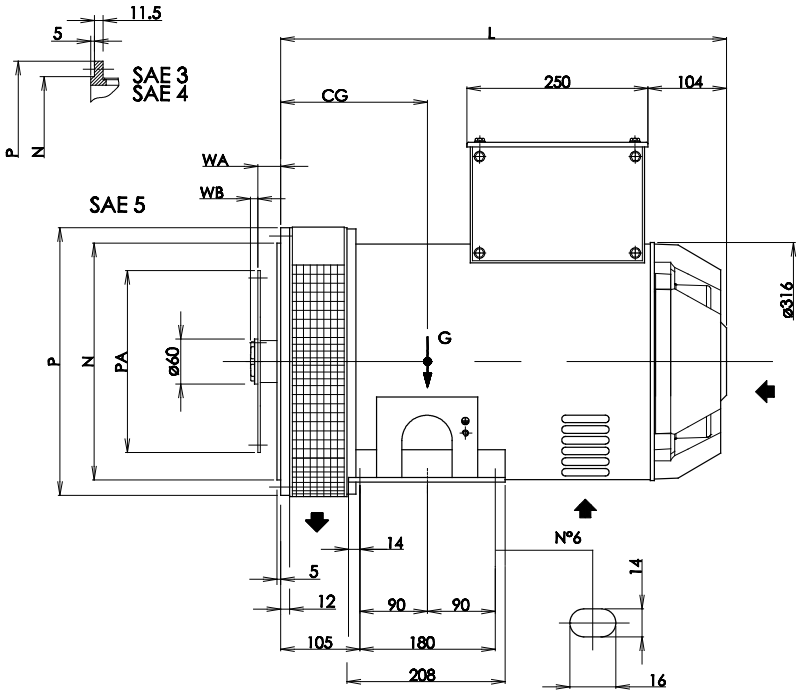

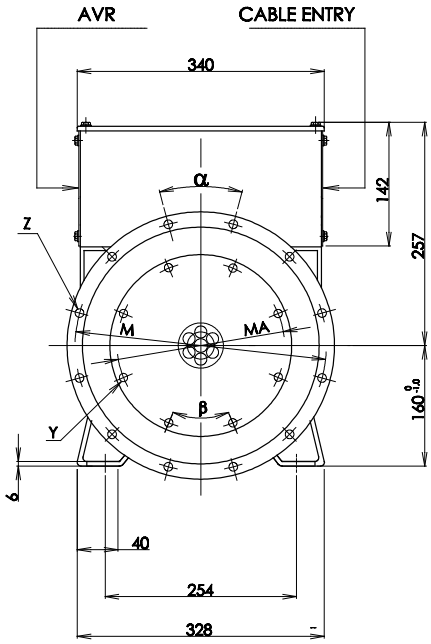

DIMENSIONS [mm]						
MJB 160	XA	SA	SB	SC	MA	MB
L	471	471	501	501	571	571
CG SAE 5-4	180	190	195	205	225	250
CG SAE 3	175	185	190	200	225	245

CONNECTING			
COUPLING SAE J620	FLANGE SAE J617		
	5	4	3
6½	•	•	
7½	•	•	
8	•	•	•
10		•	•
11½			•

COUPLING [mm]							
SAE J620	PA	MA	Y		β	WA	WB
			NR	Ø			
6½	215,90	220,02	6	9	60°	30,2	9.8
7½	241,30	222,25	8	9	45°	30,2	9.8
8	263,52	244,48	6	11	60°	62,0	-
10	314,32	295,28	8	11	45°	53,8	-
11½	352,42	333,38	8	11	45°	39,6	-

FLANGE [mm]						
SAE J617	N $^{0}_{-0,13}$	P	M	Z		α
				NR	Ø	
5	314,32	355	333,38	8	11	45°
4	361,95	404	381,00	12	11	30°
3	409,58	451	428,62	12	11	30°

DOUBLE BEARING 160 FRAME SIZE

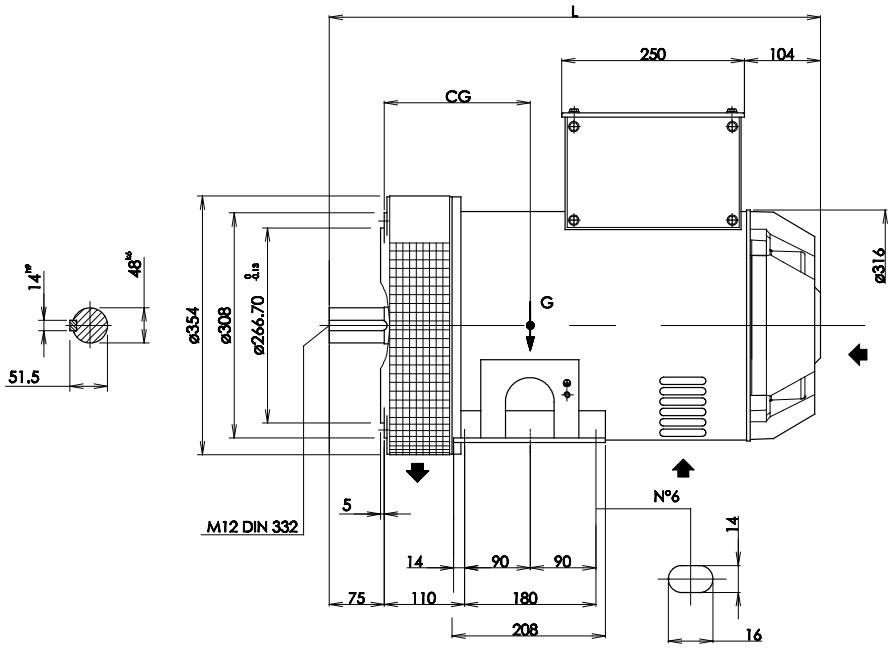

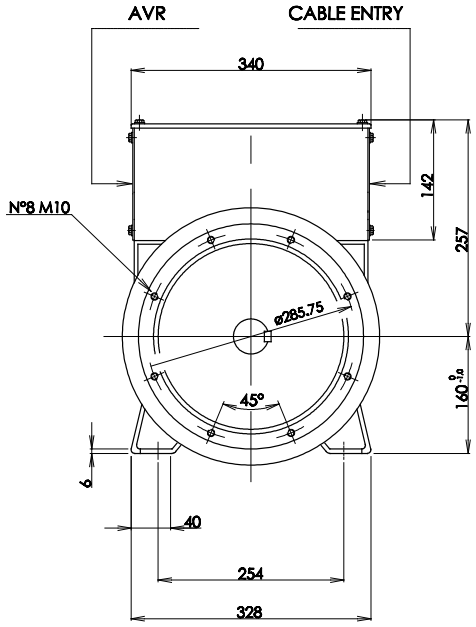

DIMENSIONS [mm]						
MJB 160	XA	SA	SB	SC	MA	MB
L	551	551	581	581	651	651
CG	185	195	200	210	230	255

SINGLE BEARING 200 FRAME SIZE

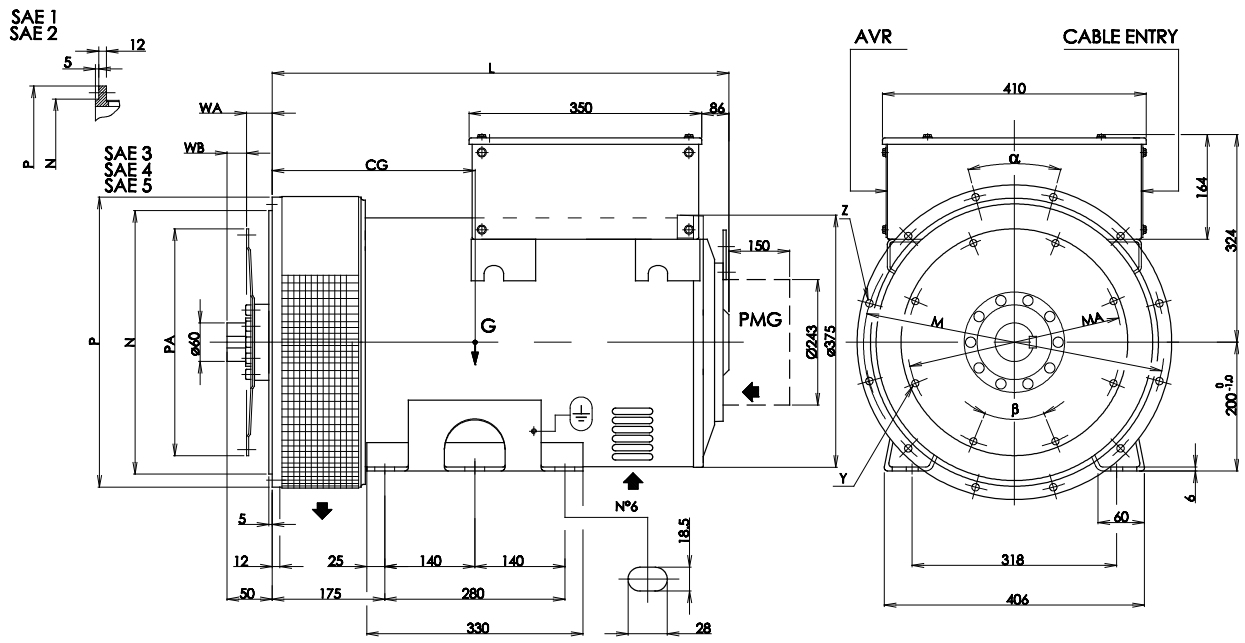

DIMENSIONS [mm]				
MJB 200	SA	SB	MA	MB
L	615	615	710	710
CG SAE 5-4	280	290	310	330
CG SAE 3-2-1	285	295	305	325

CONNECTING					
COUPLING SAE J620	FLANGE SAE J617				
	5	4	3	2	1
7½	•	•			
8	•	•	•	•	
10		•	•	•	
11½			•	•	
14					•

COUPLING [mm]								
SAE J620	PA	MA	Y		β	WA	WB
			NR	Ø			
7½	241,30	222,25	8	9	45°	30.2	19.8
8	263,52	244,48	6	11	60°	62.0	-
10	314,32	295,28	8	11	45°	53.8	-
11½	352,42	333,38	8	11	45°	39.6	10.4
14	466,72	438,15	8	14	45°	25.4	24.6

FLANGE [mm]						
SAE J617	N 0 -0,13	P	M	Z		α
				NR	Ø	
5	314,32	440	333,38	8	11	45°
4	361,95	440	381,00	12	11	30°
3	409,58	451	428,62	12	11	30°
2	447,68	489	466,72	12	11	30°
1	511,18	552	530,22	12	11	30°

DOUBLE BEARING 200 FRAME SIZE

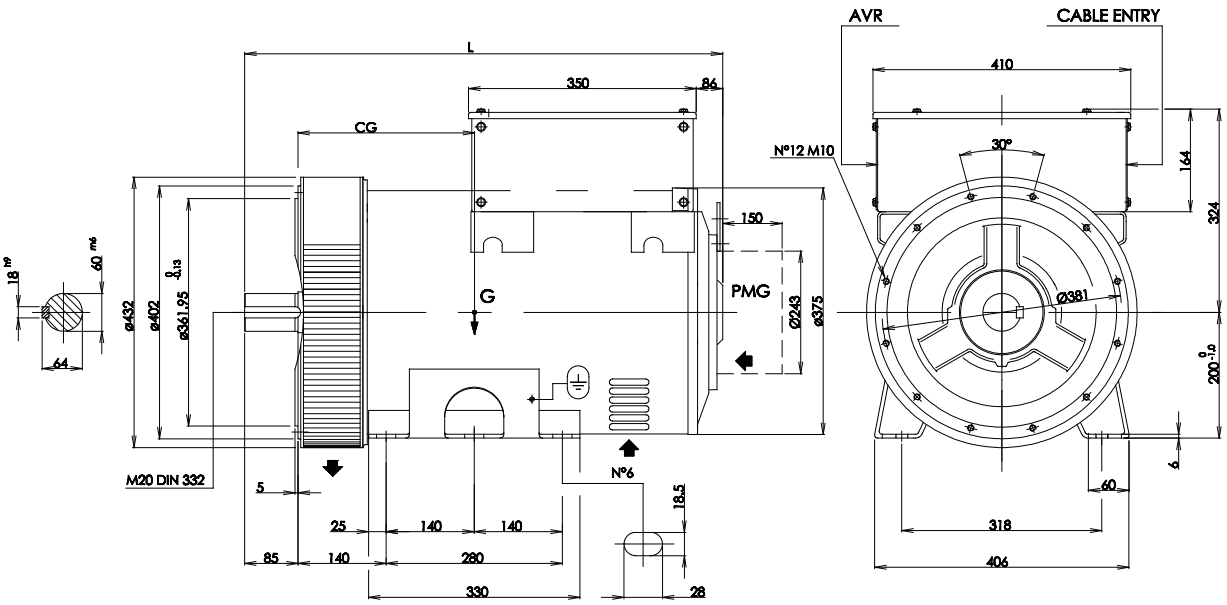

DIMENSIONS [mm]				
MJB 200	SA	SB	MA	MB
L	665	665	760	760
CG	245	260	270	300

MarelliGenerators®

Italian Manufacturing Plant
Arzignano - Italy

Malaysian Manufacturing Plant
Shah Alam - Malaysia

HEADQUARTERS

Marelli Motori S.p.A.

Via Sabbionara, 1
36071 Arzignano (VI) - Italy
(T) +39 0444 479 711
(F) +39 0444 479 888
www.marellimotori.com
sales@marellimotori.com

Branches

Milan

Via Cesare Cantù, 29
20092 Cinisello Balsamo (MI) - Italy
(T) +39 02 66 013 166
(F) +39 02 66 013 483
milan@marellimotori.com

Florence

Via Panciatichi, 37/2
50127 Firenze - Italy
(T) +39 055 431 838
(F) +39 055 433 351
florence@marellimotori.com

OVERSEAS COMPANIES

ASIA PACIFIC

Marelli Asia Pacific Sdn Bhd
Marelli Manufacturing Asia Sdn Bhd

Lot PT 5038-5041 Jalan Teluk Datuk 28/40
Off Persiaran Sepang, Seksyen 28,
40400 Shah Alam, Selangor D.E.
Malaysia
(T) +60 3 5192 7213
(F) +60 3 5192 6293
asiapacific@marellimotori.com

CENTRAL EUROPE

Marelli Central Europe Gmbh
Heilswannenweg 50
31008 Elze
Germany

(T) +49 5068 462 400
(F) +49 5068 462 409
germany@marellimotori.com

GREAT BRITAIN

Marelli UK, Ltd
Meadow Lane
Loughborough
Leicester LE111NB
UK
(T) +44 1509 615 518
(F) +44 1509 615 514
uk@marellimotori.com

SOUTH AFRICA

Marelli Electrical Machines South Africa (Pty) Ltd
Unit 4, 55 Activia Rd - Activia Park
Elandsfontein,
1406 Gauteng
Republic of South Africa
(T) +27 11 822 5566
(F) +27 11 828 8089
southafrica@marellimotori.com

SPAIN

Representative Office
Calle Constanza 5
08029 Barcelona
Spain

(T) +34 66 446 4121
(F) +34 93 419 6094
spain@marellimotori.com

USA

Marelli USA, Inc
1620 Danville Road
PO Box 410
Harrodsburg, KY 40330
USA
(T) +1 859 734 2588
(F) +1 859 734 0629
usa@marellimotori.com

MARELLI MOTORI reserves the right to change the design, technical specification and dimensions in order to update or improve its products, without prior notice