CERAM INSULATORS

PP

The very Best.

T & D Insulators

PPC INSULATORS

Quality Engineered Expect

Product you can trust

PPC insulators has its roots in providing high-quality, reliable Transmission and Distribution products dating back to 1917, when it was known as Federal Porcelain Co., in Carey, OH.

› ANSI

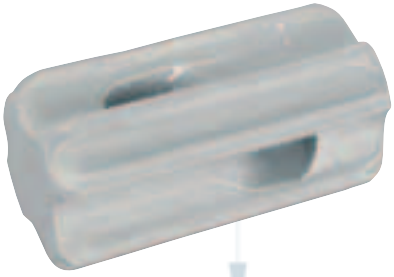

Today, we are still providing high-quality reliable products but our role has expanded as a world-wide supplier.

Whether you need suspension insulators, tie-top line post insulators, pin type and high voltage pin type insulators, PDEI Polymer deadend insulators, or spool and guy strain insulators, you can count on **PPC Insulators to have the widest range of T&D Insulators in the world ... when you need it!** That means "24/7", twenty-four hours a day, seven days a week.

T&D Insulators.
The Best!

Index

PPC INSULATORS

T&D

Suspension Insulators

PPC Insulators standard suspension insulators with high mechanical and electrical strength are designed to meet the most modern demands of high voltage and EHV transmission line usage today.

PPC Insulators makes one of the widest ranges of ANSI approved Ball–Socket and Clevis type distribution suspension insulators for overhead distribution and transmission systems in the world.

Each suspension shell undergoes rigorous electrical testing before and after assembly before being shipped. Catalogue numbers 81022, 81012, 86012, 84300 conform to ANSI Class 52-1 through 52-9 specifications and are also REA accepted.

Tie–Top Line Post Insulators

The one – piece design utilized in **PPC** Insulators tie – top line post insulator eliminates the need for suspension shells while providing maximum protection under severe flashover and mechanical impact. Designed for upright or angle mounting on a crossarm, a choice of stud assemblies is available for both wood and steel crossarms. All Line Post Insulators are manufactured by **PPC** Insulators in strict compliance to ANSI standards.

Insulators Products

Horizontal & Vertical Clamp Top Line Post

PPC Insulators offer horizontal & vertical clamp top linepost assemblies for ratings 25 kV through 35 kV.

PPC horizontal mounting line post assemblies are primarily recommended for downleads, jumper loop control and similar applications. A galvanized metal cap is cemented to the outside of the line post head supporting the trunnion type clamp.

PPC vertical clamp top line post insulators are mounted upright on crossarms and structures. Rated at 2800 lb. cantilever strength these insulators offer strength with excellent mechanical as well as electrical characteristics.

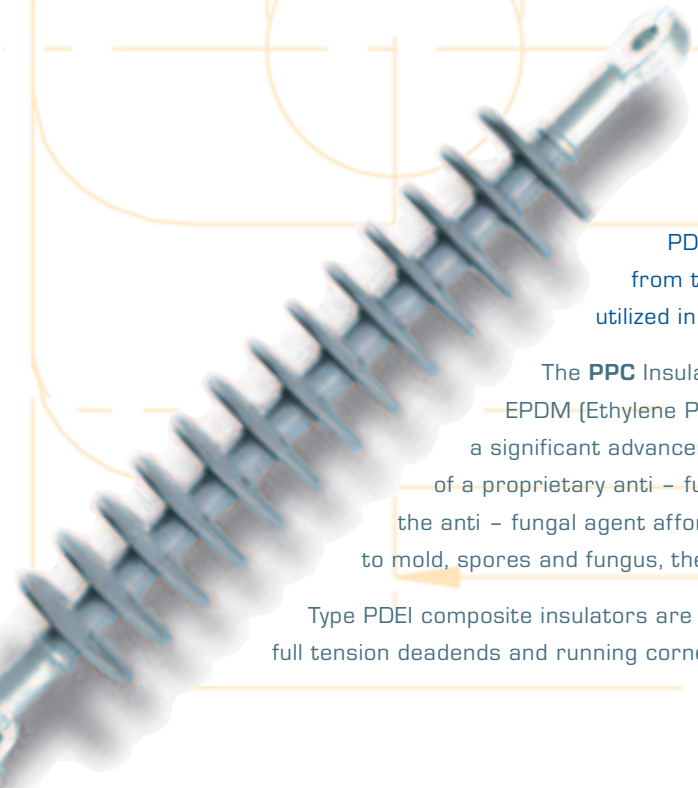

PDEI Polymer Deadend Insulators

PDEI composite insulators are manufactured from two base compounds; silicone, the type most often utilized in highly contaminating areas, and EPDM.

The **PPC** Insulators EPDM version has evolved from the original formulation, EPDM (Ethylene Propylene Diamer Modified), into a formulation representing a significant advancement; the development and addition of a proprietary anti – fungal agent. Since EPDM is an organic compound, the anti – fungal agent affords the industry an insulator with superior resistance to mold, spores and fungus, thereby insuring product longevity.

Type PDEI composite insulators are designed for distribution line suspension, full tension deadends and running corners with maximum high design loads.

T & D Insulators

PinType Insulators

Highly resistant to lightning puncture, **PPC** Insulators manufactures a wide range of low and high voltage PinType Insulators designed for distribution and sub transmission circuits. The versatile neck designs in "C, F, K and J," side and top grooves, allow the acceptance of large – diameter conductors to permit easy tying. All neck sizes conform to industry standards allowing factory – formed ties to be used.

Pin Post Insulators

PPC Insulators alternative design offers users the unique advantage of reducing inventory by using the pin type insulator as a line post insulator. The primary advantage of the pin post insulator is really the advantage of better operating characteristics to line post insulators without changing the hardware.

PPC's thimble design ensures the highest strength and is tested for integrity prior to assembly.

Products

Spool and Guy Strains

PPC Insulators makes spool and guy strain insulators out of the highest grade electrical wet-process porcelain in a wide range of electrical values and all resistant to mechanical breakage.

Strength ratings are made in accordance with ANSI Standard C29.4 for ultimate strength.

T&D Insulators Product

Hardware

ball & socket coupling

clevis-eye coupling

Suspension insulators are available for ball & socket or clevis-eye coupling. Standard caps are constructed of hot-dip galvanized malleable iron. Cotter keys for locking ball & socket and clevis pin connections are stainless steel.

Cementing

Caps, ball bolts and eyebolts are cemented on to the porcelain, loading the porcelain in a large area, low intensity compression grip. **PPC** Insulators utilizes a special Portland cement, particularly suited for use on porcelain insulator assemblies.

Hardware Coating

Prior to cementing, all hardware surfaces in contact with cement are coated with a bituminous (asphalt) compound. The compound protects the hardware from chemical attack by the cement and provides thermal movement between parts to relieve mechanical stress created by thermal movement or cement growth.

Features

Bonded Sand Bands

Sand bands bonded to the porcelain by glaze provide a rough surface for permanently attaching the hardware and distributing loading evenly through the porcelain. The high strength compression sand is manufactured by **PPC** Insulators to match the characteristics of the porcelain body.

Porcelain Body

PPC transmission and distribution insulators are constructed of high quality electrical grade porcelain.

Each porcelain body receives a series of electrical tests prior to assembly. 100% of all bodies are subjected to high frequency puncture tests thereby insuring soundness and performance prior to assembly. This same test, in addition to other prescribed ANSI tests, are performed once again after assembly insuring the integrity of the porcelain and the assembled product.

T&D Insulators Product

Protected Leakage Configuration

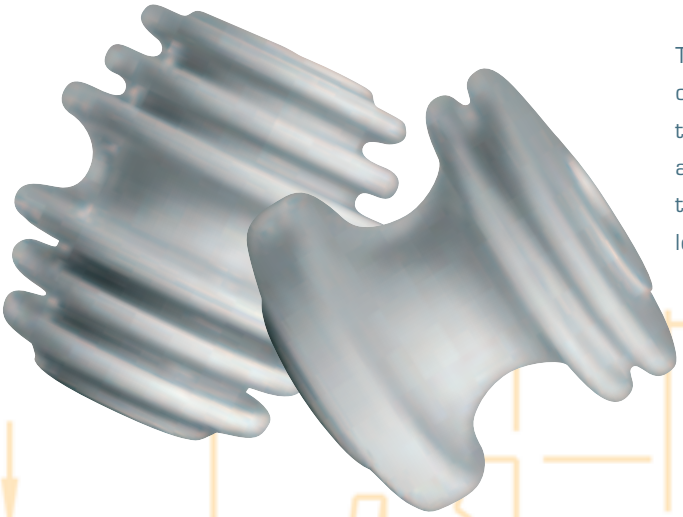

The umbrella type spreading porcelain shell or shed protects the leakage corrugations on the underside of the insulator from contamination and mechanical damage. The sheds are designed to provide optimum normal and protected leakage distance in relation to size and shape.

Forged Steel Eye & Ball Bolts

PPC Insulators utilizes hot dip galvanized forged steel for the ball bolt and the eyebolt. Standard production of suspension insulators incorporates a pregnant bolt design for both ball & socket and clevis type units. The extra mass of the pregnant bolt design plus the compound coating provides corrosion protection at the cement line caused by ozone, electrolytic action and other factors. A zinc sleeve may also be supplied on a straight bolt, for corrosion protection, when specified.

Interference Free

PPC Insulators suspension insulators are radio & television interference free by design and have been completely tested, both individually and as assemblies. Our hardware is smooth contoured with well-rounded edges to reduce RIV build-up and does not require corona rings.

Features

Glaze

Skyline gray glaze (ANSI – 70, Munsell 5BG 7.0/0.4) is supplied as standard on all **PPC** suspension insulators unless otherwise specified.

Brown glaze is also available upon request; simply add the letter "B" at the end of the catalogue number.

Reduced incidence of puncture

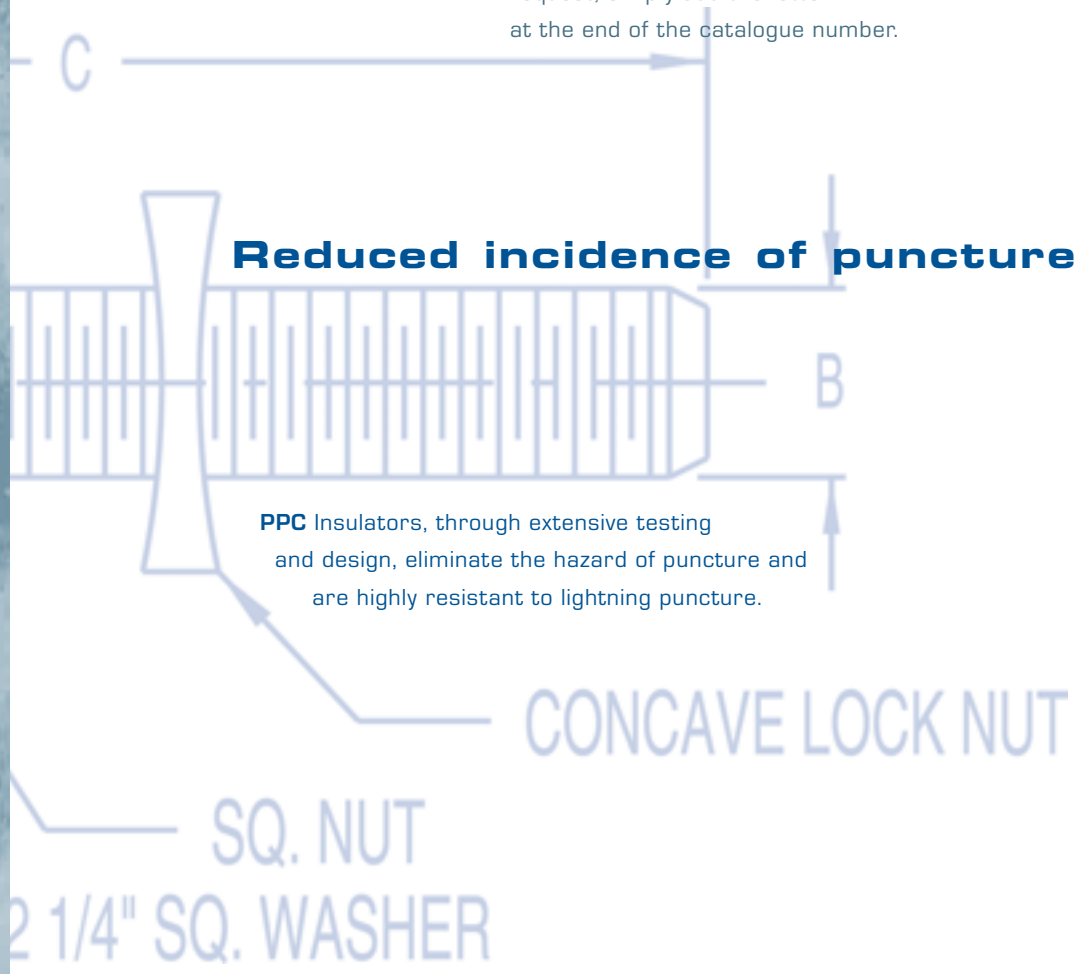

PPC Insulators, through extensive testing and design, eliminate the hazard of puncture and are highly resistant to lightning puncture.

T&D Insulators

Suspension Insulators

Steel Hardware

Ball-Socket

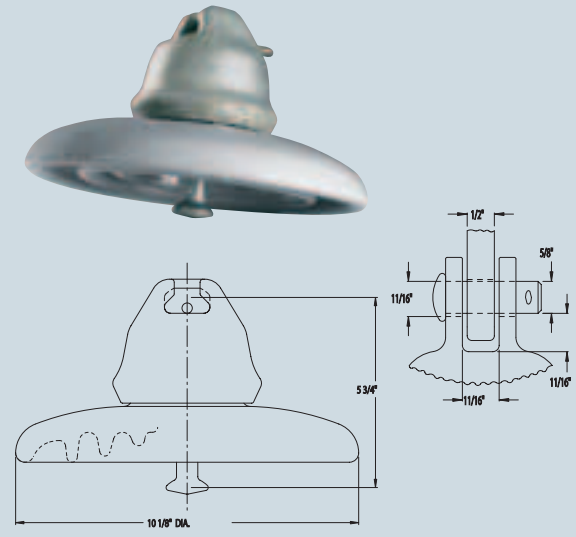

Type 81022

Clevis Type

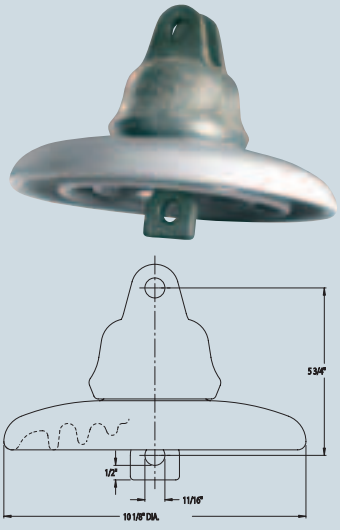

Type 81012

Clevis Type

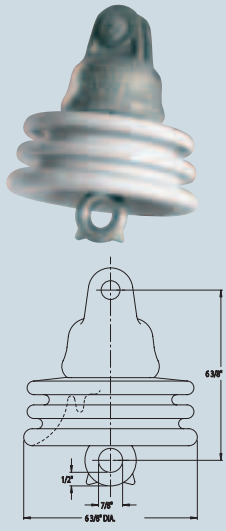

Type 84166

Mechanical & Electrical Characteristics

PPC Insulators Catalog Number	†81022	†81012	84166
ANSI Technical Reference Number	52-3	52-4	N/A
Dimensions			
Leakage Distance (in)/(mm)	11 1/2" 292.10 mm	11 1/2" 292.10 mm	10" 254.00 mm
Dry Arcing Distance (in)/(mm)	7 3/4" 196.85 mm	7 3/4" 196.85 mm	6" 152.40 mm
Height (in)/(mm)	5 3/4" 146.05 mm	5 3/4" 146.05 mm	6 3/8" 161.93 mm
Diameter (in)/(mm)	10 1/8" 257.18 mm	10 1/8" 257.18 mm	6 3/8" 161.93 mm
Diameter of Clevis Ring (in)/(mm)	N/A	1 1/6" 26.99 mm	1 1/6" 26.99 mm
Mechanical Values			
ANSI M & E Category	15000 lbs.	15000 lbs.	N/A
Comb. M & E Strength	20000 lbs.	20000 lbs.	10000 lbs.
Mechanical Impact Strength	55 inch lbs.	55 inch lbs.	50 inch lbs.
Routine Proof Test	10000 lbs.	10000 lbs.	5000 lbs.
Time Load Test	13200 lbs.	13200 lbs.	6000 lbs.
Electrical Values			
Low Frequency Flashover Dry	80 kV	80 kV	75 kV
Low Frequency Flashover Wet	50 kV	50 kV	40 kV
Impulse Flashover Positive	125 kV	125 kV	115 kV
Impulse Flashover Negative	130 kV	130 kV	115 kV
Low Frequency Puncture Voltage	110 kV	110 kV	90 kV
Radio Influence Low Frequency Test Voltage Data			
Test Voltage, Rms to Ground, KV	10 kV	10 kV	7.5 kV
Maximum RIV at 1000 kHz - V	50	50	50
Weight			
Maximum Net Weight	11 lbs.	11.8 lbs.	6.0 lbs.
Packaged Weight Per Unit	12.5 lbs.	13.3 lbs.	6.75 lbs.
Packaging			
Standard Packaging Quantity	6	6	8
Insulator Coatings			
Standard Glaze "Skyline" ANSI-70, Munsell 5 BG 7.0/0.4	Standard	Standard	Standard

Special Glaze Requirement Upon Request † REA Accepted

Suspension Insulators

Steel Hardware

Clevis Type

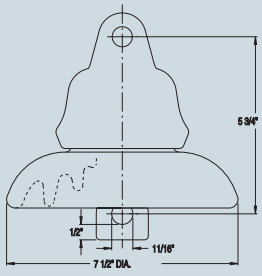

Type 87512

Clevis Type

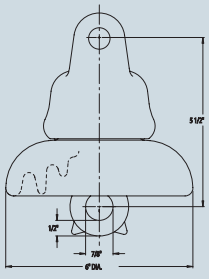

Type 86012

Clevis Type

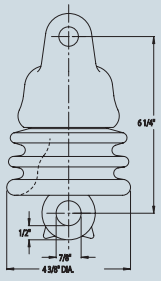

Type 84300

Mechanical & Electrical Characteristics

PPC Insulators Catalog Number	87512	†86012	†84300
ANSI Technical Reference Number	52-2	52-1	52-9
Dimensions			
Leakage Distance (in)/(mm)	8 1/4" 209.55 mm	7" 177.80 mm	6 3/4" 171.45 mm
Dry Arcing Distance (in)/(mm)	5 1/2" 139.70 mm	4 1/2" 114.30 mm	4" 101.60 mm
Height (in)/(mm)	5 3/4" 146.05 mm	5 1/2" 139.70 mm	6 1/4" 158.75 mm
Diameter (in)/(mm)	7 1/2" 190.50 mm	6" 152.40 mm	4 3/8" 111.13 mm
Diameter of Clevis Ring (in)/(mm)	1 1/6" 26.99 mm	7/8" 22.23 mm	7/8" 22.23 mm
Mechanical Values			
ANSI M & E Category	15000 lbs.	10000 lbs.	10000 lbs.
Comb. M & E Strength	15000 lbs.	10000 lbs.	10000 lbs.
Mechanical Impact Strength	50 inch lbs.	45 inch lbs.	45 inch lbs.
Routine Proof Test	7500 lbs.	5000 lbs.	5000 lbs.
Time Load Test	10000 lbs.	6000 lbs.	6000 lbs.
Electrical Values			
Low Frequency Flashover Dry	65 kV	60 kV	60 kV
Low Frequency Flashover Wet	35 kV	30 kV	30 kV
Impulse Flashover Positive	115 kV	100 kV	100 kV
Impulse Flashover Negative	115 kV	100 kV	90 kV
Low Frequency Puncture Voltage	90 kV	80 kV	80 kV
Radio Influence Low Frequency Test Voltage Data			
Test Voltage, Rms to Ground, KV	7.5 kV	7.5 kV	7.5 kV
Maximum RIV at 1000 kHz - V	50	50	50
Weight			
Maximum Net Weight	9.1 lbs.	5.5 lbs.	5.2 lbs.
Packaged Weight Per Unit	10.1 lbs.	6.0 lbs.	5.8 lbs.
Packaging			
Standard Packaging Quantity	8	12	12
Insulator Coatings			
Standard Glaze "Skyline" ANSI-70, Munsell 5 BG 7.0/0.4	Standard	Standard	Standard

Special Glaze Requirement Upon Request † Special Note: REA Accepted

T&D Insulators

Tie-Top Line Post Insulators

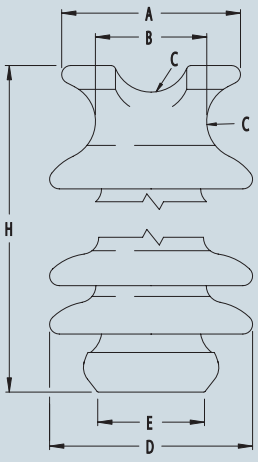

Type "F" Neck

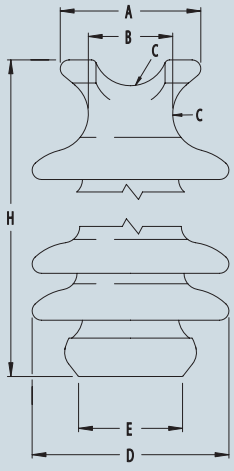

Type "C" Neck

PPC Insulators Catalog Number	5015	5020	5025	5027	5035	5045	5115	5120	5125	5127	5135	5145
ANSI Technical Reference Number	N/A	N/A	57-1	N/A	57-2	57-3	N/A	N/A	57-1	N/A	57-2	57-3
Type "Neck"	C	C	C	C	C	C	F	F	F	F	F	F
Dimensions												
Dimension A - Inches	3 3/4"	3 3/4"	3 3/4"	3 3/4"	3 3/4"	3 3/4"	4 5/8"	4 5/8"	4 5/8"	4 5/8"	4 5/8"	4 5/8"
Dimension B - Inches	2 1/4"	2 1/4"	2 1/4"	2 1/4"	2 1/4"	2 1/4"	2 7/8"	2 7/8"	2 7/8"	2 7/8"	2 7/8"	2 7/8"
Dimension C (radius) - Inches	1"	1"	1"	1"	1"	1"	1"	1"	1"	1"	1"	1"
Dimension D - Inches	4 3/4"	5 1/4"	5 1/2"	5 1/4"	6"	6 1/2"	4 3/4"	5 1/4"	5 1/2"	5 1/4"	6"	6 1/2"
Dimension E - Inches	3 5/9"	3 5/9"	3 5/9"	3 5/9"	4 5/9"	4 5/9"	3 5/9"	3 5/9"	3 5/9"	3 5/9"	4 5/9"	4 5/9"
Dimension H - Inches	7 3/4"	8 3/4"	8 4/5"	9 7/8"	12 1/16"	14 9/16"	7 3/4"	8 3/4"	8 4/5"	9 7/8"	12 1/16"	14 5/9"
Number of Skirts	3	4	4	5	6	8	3	4	4	5	6	8
Leakage Distance - Inches	7 1/2"	11"	14"	16"	22"	29"	7 1/2"	11"	14"	16"	22"	29"
Dry Arching Distance - Inches	5"	5 3/4"	6 1/2"	7 5/8"	9 1/2"	12 1/4"	5"	5 3/4"	6 1/2"	7 5/8"	9 1/2"	12 1/4"
Mechanical Values												
Cantilever Strength - lbs.	2000	2000	2800	1500	2800	2800	2000	2000	2800	1500	2800	2800
Cantilever Proof Load - lbs.	800	800	1120	800	1120	1120	800	800	1120	800	1120	1120
Electrical Values												
Typical Application kV	15	20	25	27	35	45	15	20	25	27	35	45
Low Frequency Flashover - Dry - kV	65	80	80	95	110	125	65	80	80	95	110	125
Low Frequency Flashover - Wet - kV	40	55	60	65	85	100	40	55	60	65	85	100
Critical Impulse Flashover (+) kV	100	110	130	140	180	210	100	110	130	140	180	210
Critical Impulse Flashover (-) kV	130	140	155	190	205	260	130	140	155	190	205	260
Radio Influence Voltage Data												
RIV RMS to Ground Test Voltage - kV	10	15	15	20	22	30	10	15	15	20	22	30
Maximum RIV at 1000 kHz - µV	50	50	100	50	100	200	50	50	100	50	100	200
Weight												
Net Weight per Unit - lbs.	7	8.5	9	8.5	18	25	7	8.5	9	8.5	18	25
Packaged Weight Per Unit - lbs.	72	52	55	52	74	102	72	52	55	52	74	102
Packaging												
Standard Package Quantity - Each	10	6	6	6	3	3	6	6	3	6	3	3
Insulator Coating												
Standard Glaze "Skyline" ANSI-70, Munsell 5 BG 7.0/0.4	Std.	Std.	Std.	Std.	Std.	Std.	Std.	Std.	Std.	Std.	Std.	Std.

REA Accepted
All bases tapped for 3/4"-10 Stud Size
Typical application Voltage Values are listed as a guide for selection where operating conditions are normal.
Environmental factors may require the use of higher rated insulators or allow the use of lower rated insulators.

Studs For Line Post Insulators

Wood/Steel Crossarms

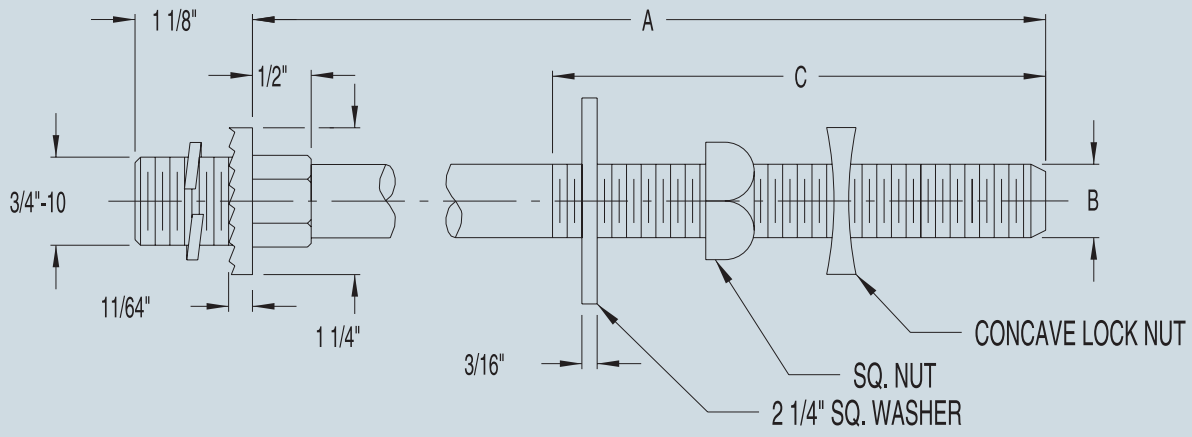

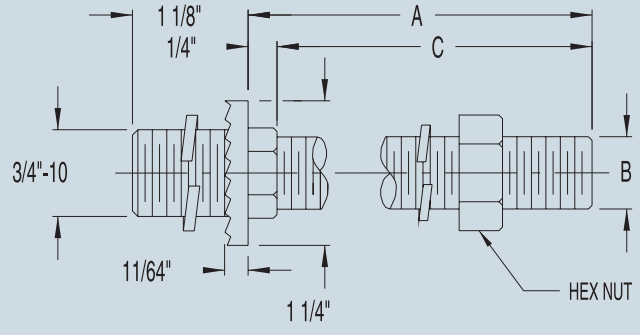

Long-For Wood Crossarms

Catalog Number	6510	6512
Dimensions		
A	7 9/16"	7 9/16"
B	5/8" - 11	3/4" - 10
C	6"	6"

Short-For Steel Crossarms

Catalog Number	6500	6502
Dimensions		
A	1 3/4"	1 3/4"
B	5/8" - 11	3/4" - 10
C	1 7/16"	1 7/16"

T&D Insulators

Horizontal Clamp Type Line Posts

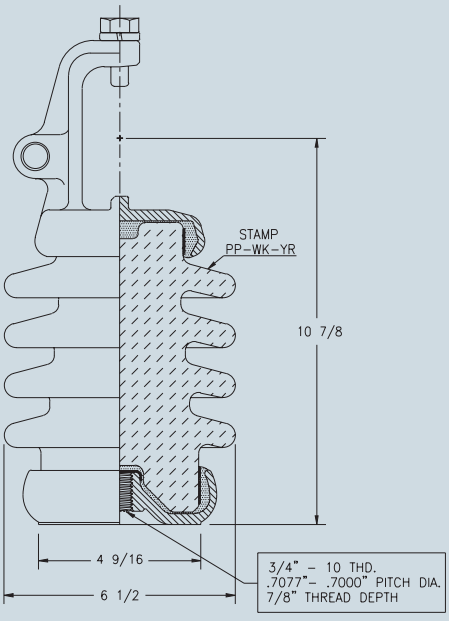

No. 5225

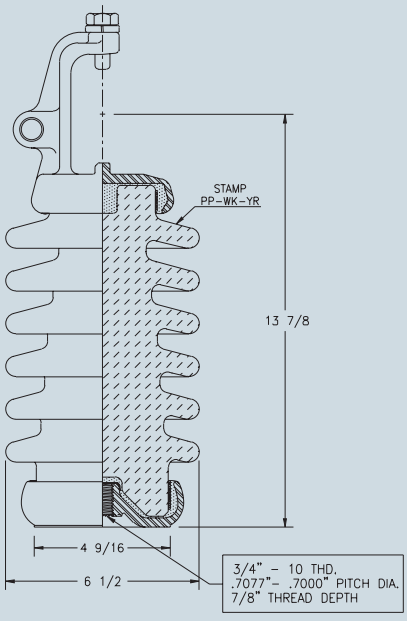

No. 5235

PPC Insulators Catalog Number	5225	5235
ANSI Technical Reference Number	57-21	57-22
Dimensions		
Leakage Distance (in)/(mm)	14" 355.60 mm	22" 558.80 mm
Dry Arcing Distance (in)/(mm)	6 1/2" 165.10 mm	9 1/2" 241.30 mm
Height To Middle of Clamp Assembly (in)/(mm)	10 7/8" 276.23 mm	13 7/8" 352.43 mm
Diameter (in)/(mm)	6 1/2" 165.10 mm	6 1/2" 165.10 mm
Mechanical Values		
Cantilever Strength	2800 lbs.	2800 lbs.
Cantilever Proof Load	1120 lbs.	1120 lbs.
Electrical Values		
Typical Line Voltage Application	25 kV	35 kV
Low Frequency Flashover Dry	80 kV	110 kV
Low Frequency Flashover Wet	70 kV	80 kV
Impulse Flashover Positive	130 kV	180 kV
Impulse Flashover Negative	155 kV	205 kV
Radio Influence Low Frequency Test Voltage Data		
Test Voltage, Rms to Ground, kV	15 kV	22 kV
Maximum RIV at 1000 kHz - µV	100	100
Weight		
Maximum Net Weight	15 lbs.	21 lbs.
Packaged Weight Per Unit	18 lbs.	25 lbs.
Packaging		
Standard Packaging Quantity	3	3
Insulator Coatings		
Standard Glaze "Skyline" ANSI-70, Munsell 5 BG 7.0/0.4	Standard	Standard

Special Glaze Requirement Upon Request

Vertical Clamp Type Line Posts

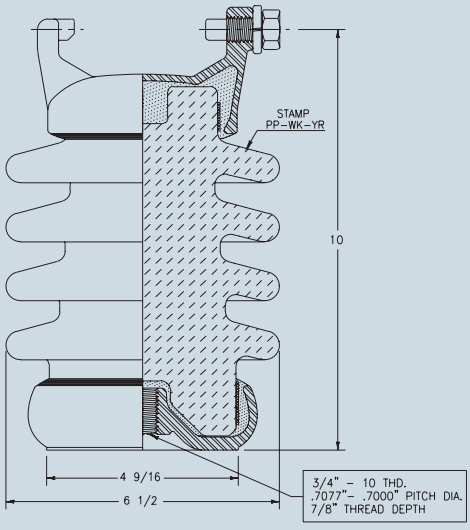

No. 5325

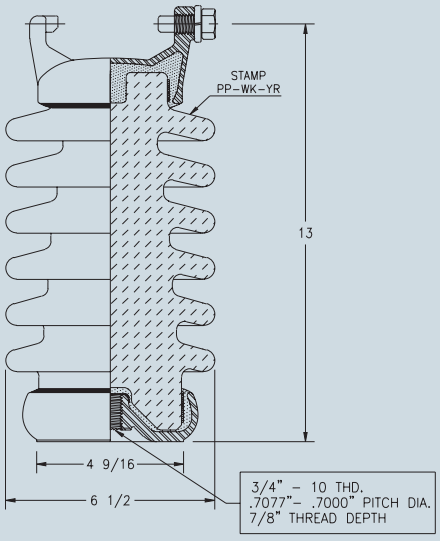

No. 5335

PPC Insulators Catalog Number	5325	5335
ANSI Technical Reference Number	57-11	57-12
Dimensions		
Leakage Distance (in)/(mm)	14" 355.60 mm	22" 558.80 mm
Dry Arcing Distance (in)/(mm)	6 1/2" 165.10 mm	9 1/2" 241.30 mm
Height To Middle of Single Cap Screw (in)/(mm)	10" 254.00 mm	13" 330.20 mm
Diameter (in)/(mm)	6 1/2" 165.10 mm	6 1/2" 165.10 mm
Mechanical Values		
Cantilever Strength	2800 lbs.	2800 lbs.
Cantilever Proof Load	1120 lbs.	1120 lbs.
Electrical Values		
Typical Line Voltage Application	25 kV	35 kV
Low Frequency Flashover Dry	80 kV	110 kV
Low Frequency Flashover Wet	60 kV	85 kV
Impulse Flashover Positive	130 kV	180 kV
Impulse Flashover Negative	155 kV	205 kV
Radio Influence Low Frequency Test Voltage Data		
Test Voltage, Rms to Ground, kV	15 kV	22 kV
Maximum RIV at 1000 kHz - µV	100	100
Weight		
Maximum Net Weight Per Unit	16 lbs.	25 lbs.
Packaged Weight Per Unit	19 lbs.	27 lbs.
Packaging		
Standard Packaging Quantity	3	3
Insulator Coatings		
Standard Glaze "Skyline" ANSI-70, Munsell 5 BG 7.0/0.4	Standard	Standard

Special Glaze Requirement Upon Request

T&D Insulators

Polymer Deadend Insulators

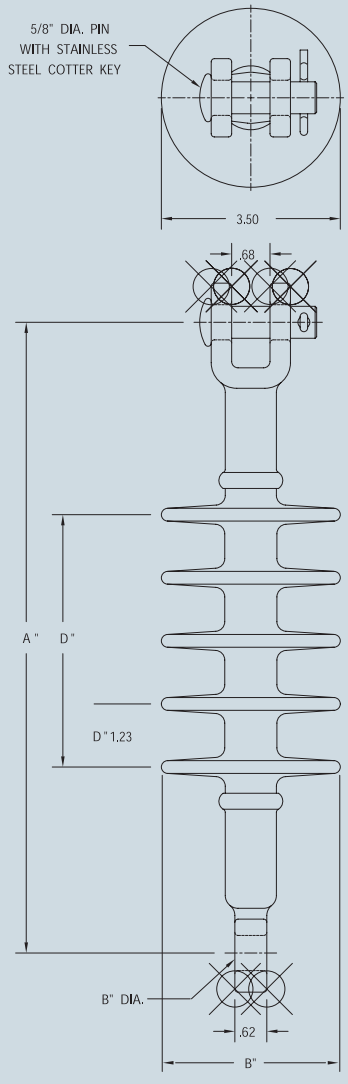

Type PDEI 15

Type PDEI 25

Type PDEI 35

Material	End Fittings	Pin	Cotter Key
EPDM Rubber*	Malleable Iron, Hot dip galvanized	Steel, hot dip galvanized	Stainless steel

* For optional silicone rubber skirt material, add suffix " -S1" to the Catalog No. (Example: PDEI-15-SI)
1. Type PDEI, EPDM & Silicone Rubber Insulators meet or exceed the requirements of IEEE Standard 1024-1988
2. PDEI-15 and PDEI-25 insulators are REA listed in Bulletin 1728-C-100 "List of Materials Acceptable for Use on Systems of Electrical Borrowers" on page K(2)

Dimensional Data and Weights

Catalog Number	Dimensions				Number of Skirts	Weight	Standard Package Quantity
	A	B	C	D		Per lbs.	
PDEI-15	12 1/2"	3 1/2"	1 1/4"	4 15/16"	5	2 1/2	18
PDEI-25	17 3/4"	3 1/2"	1 1/4"	9 7/8"	9	3 5/16	18
PDEI-35	22 1/2"	3 1/2"	1 1/4"	14 13/16"	13	4 3/32	12

Specifications

Catalog Number	kV Rating	IEEE Class 1	Tensile Strength Lbs.		Electrical Flashover - kV				Electric Leakage Distance
					60 Hertz		Impulse		
			Rating	Proof Test	Dry	Wet	Positive	Negative	(Inches)
PDEI-15	15	CI-1	15000	10000	90	65	140	170	16 1/2
PDEI-25	25	CI-2	15000	10000	130	110	215	225	26 5/8
PDEI-35	35	CI-4	15000	10000	145	130	250	270	42 13/16

T&D Insulators

Pintype Insulators

No. 261-S

No. 366-S

No. 380-S

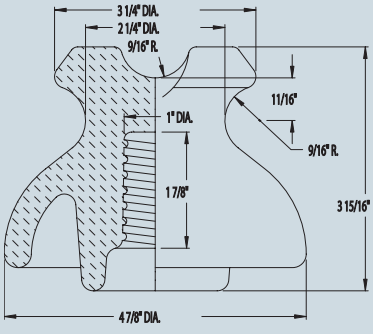

No. 261-S
ANSI Class 55-3
"C" Neck

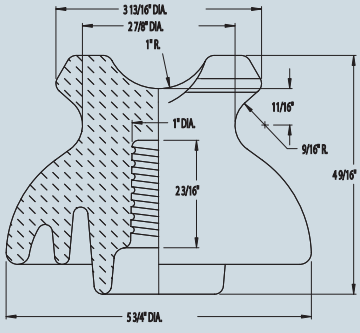

No. 366-S
ANSI Class 55-4
"F" Neck

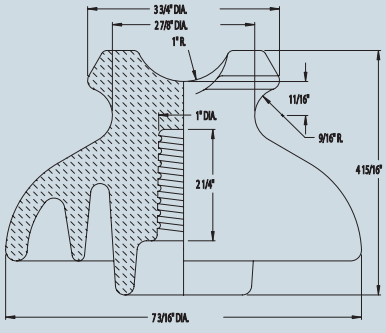

No. 380-S
ANSI Class 55-5
"F" Neck

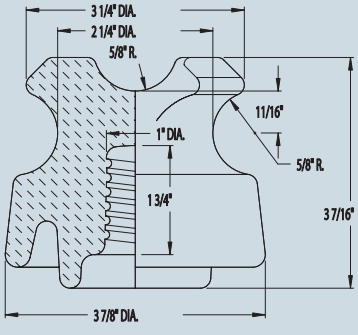

No. 253-S
ANSI Class 55-2
"C" Neck

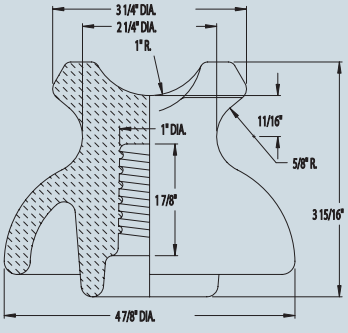

No. 263-S
"C" Neck

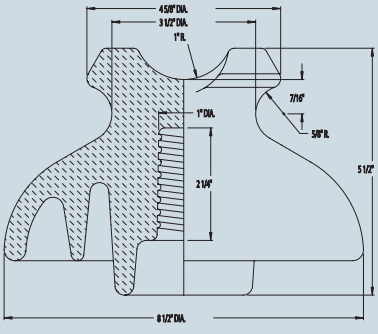

No. 386-ST
ANSI Class 55-6
"J" Neck

Mechanical & Electrical Characteristics

Catalog Number	†253-S	†261-S	263-S	†366-S	380-S	386-ST
Typical Application	7.2 kV	11.5 kV	11.5 kV	13.2 kV	14.4 kV	23 kV
Dry Flashover Voltage	45 kV	55 kV	55 kV	65 kV	80 kV	100 kV
Wet Flashover Voltage	25 kV	30 kV	30 kV	35 kV	45 kV	50 kV
Puncture Voltage	70 kV	90 kV	90 kV	95 kV	115 kV	135 kV
Impulse Flashover Positive	70 kV	90 kV	90 kV	105 kV	130 kV	150 kV
Impulse Flashover Negative	85 kV	110 kV	110 kV	130 kV	150 kV	170 kV
Leakage Distance	5"	7"	7"	9"	12"	15"
Dry Arcing Distance	3 3/8"	4 1/2"	4 1/2"	5"	6 1/4"	8"
Cantilever Strength	2500 lbs.	2500 lbs.	2500 lbs.	3000 lbs.	3000 lbs.	3000 lbs.
Minimum Pin Height	4"	5"	5"	5"	6"	7 1/2"
Net Weight Per 100	183 lbs.	225 lbs.	260 lbs.	390 lbs.	500 lbs.	890 lbs.
Package Weight Per 100	191 lbs.	254 lbs.	288 lbs.	400 lbs.	617 lbs.	938 lbs.
Standard Package Quantity	48	24	24	12	12	8

† REA Accepted
Standard Glaze "Skyline" ANSI-70, Munsell 5 BG 7.0/0.4
Above Insulators furnished Standard with Semi-Conductive Glaze (Type S) to eliminate noise.
Plain Glaze available on Special Order.
Type-S Insulator Characteristics shown above.
See Page 20 for R.I.V. and impulse characteristics.
Typical application Voltage Values are listed as a guide for selection where operating conditions are normal. Environmental factors may require the use of higher rated insulators or allow the use of lower rated insulators.

T&D Insulators

High Voltage Pintype Insulators

Standard Pinholes For PinType Insulators

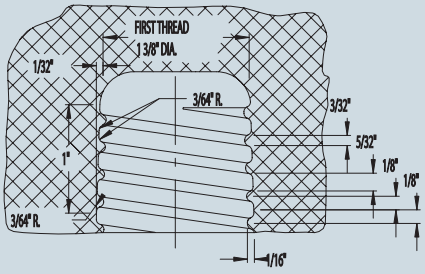

1" Pinhole

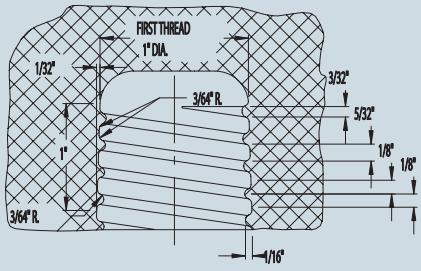

1 3/8" Pinhole

1027 ST

Threads – four threads per inch tapering 1/16" in diameter to 1" in length.
Each Pintype insulator thread fit is checked with thread gauge according to
ANSI C29.5 – 1969

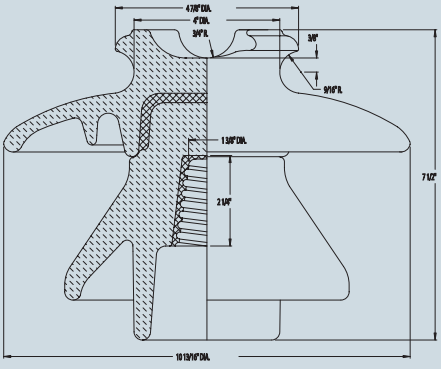

No. 2045-S
ANSI Class 56-3
"K" Neck

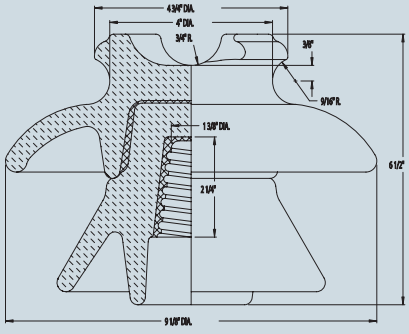

No. 2033-S
ANSI Class 56-2
"K" Neck

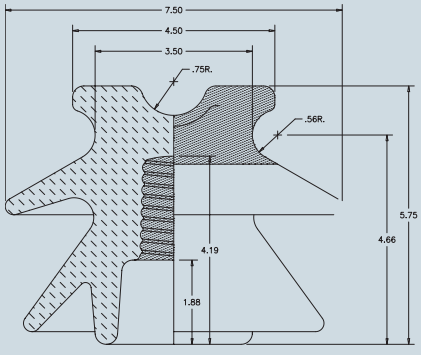

No. 1027 ST
ANSI Class 56-1
"J" Neck

Mechanical & Electrical Characteristics

Catalog Number	†1027 ST	2033-S	†2045-S
Typical Application	23 kV	23 kV	34.5 kV
Dry Flashover Voltage	95 kV	110 kV	125 kV
Wet Flashover Voltage	60 kV	70 kV	80 kV
Puncture Voltage	130 kV	145 kV	165 kV
Impulse Flashover Positive	150 kV	175 kV	200 kV
Impulse Flashover Negative	190 kV	225 kV	265 kV
Leakage Distance	13"	17"	21"
Dry Arcing Distance	7"	8 1/4"	9 1/2"
Cantilever Strength	2500 lbs.	3000 lbs.	3000 lbs.
Minimum Pin Height	6"	7"	8"
Net Weight Per 100	752 lbs.	900 lbs.	1150 lbs.
Package Weight Per 100	800 lbs.	1025 lbs.	1375 lbs.
Standard Package Quantity	8	4	4

†REA Accepted
Standard Glaze "Skyline" ANSI-70, Munsell 5 BG 7.0/0.4
Above Insulators furnished Standard with Semi-Conductive Glaze (Type S) to eliminate noise.
Plain Glaze available on Special Order. Type-S Insulator Characteristics shown above.
See below for R.I.V. and impulse characteristics.
Typical application Voltage Values are listed as a guide for selection where operating conditions are normal. Environmental factors may require the use of higher rated insulators or allow the use of lower rated insulators.

R. I. V. And Impulse Characteristics

Catalog Number		60 - Cycl Test Voltage	Maximum Radio Influence Voltage at 1000 KC - Microvolts		Type - S Impulse Flashover kV	
Plain	Type - S	kV	Plain	Type - S	Postitive	Negative
253	253 - S	15	2500	50	70	85
261	261 - S	10	5500	50	90	110
263	263 - S	10	5500	50	90	110
366	366 - S	10	5500	50	105	130
380	380 - S	15	8000	100	130	150
386	386 - S	22	8000	100	150	170
1027	1027 ST	15	8000	100	150	190
2033	2033 - S	22	12000	100	175	225
2045	2045 - S	30	16000	200	200	265

T&D Insulators

Pinpost Insulators

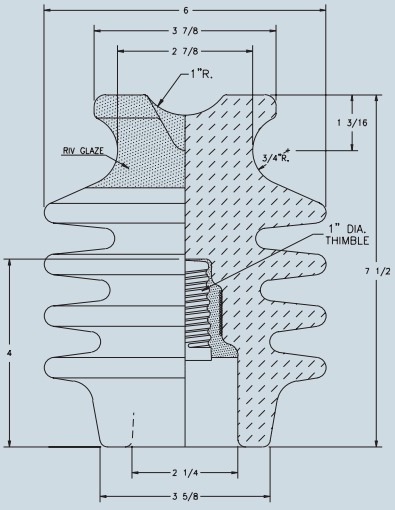

No. 400321

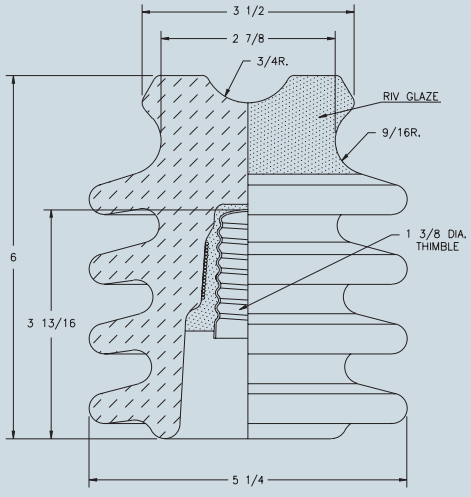

No. 410033

PPC Insulators Catalog Number	400321	410033
Dimensions		
Leakage Distance (in)/(mm)	18" 457.20 mm	13" 330.20 mm
Dry Arcing Distance (in)/(mm)	9" 228.60 mm	6 3/4" 171.45 mm
Height (in)/(mm)	7 1/2" 190.50 mm	6" 152.40 mm
Diameter (in)/(mm)	6" 152.40 mm	5 1/4" 133.35 mm
Mechanical Values		
Cantilever Strength	3000 lbs.	2500 lbs.
Electrical Values		
Typical Line Voltage Application	25 kV	27 kV
Low Frequency Flashover Dry	100 kV	85 kV
Low Frequency Flashover Wet	70 kV	60 kV
Impulse Flashover Positive	155 kV	140 kV
Impulse Flashover Negative	190 kV	170 kV
Low Voltage Puncture Voltage	160 kV	115 kV
Radio Influence Low Frequency Test Voltage Data		
Test Voltage, Rms to Ground, kV	20 kV	15 kV
Maximum RIV at 1000 kHz - µV	100	100
Weight		
Maximum Net Weight Per Unit	10 lbs.	5.85 lbs.
Packaged Weight Per Unit	10.50 lbs.	6.20 lbs.
Packaging		
Standard Packaging Quantity	6	6
Glaze		
Standard Glaze "Skyline" ANSI-70, Munsell 5 BG 7.0/0.4	Standard with Semi-Conductive Glaze	Standard Semi-Conductive Glaze

Special Glaze Requirement Upon Request

Beside insulators furnished standard with semi-conductive glaze to eliminate noise. Plain glaze available on special order.

Typical application Voltage Values are listed as a guide for selection where operating conditions are normal. Environmental factors may require the use of higher rated insulators or allow the use of lower rated insulators.

T&D Insulators

Spool and Guy Strain Insulators

Wet Process Porcelain

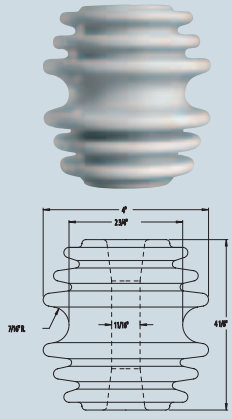

No. 5116

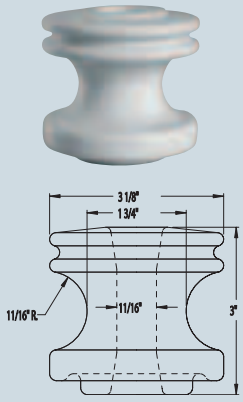

No. 5101

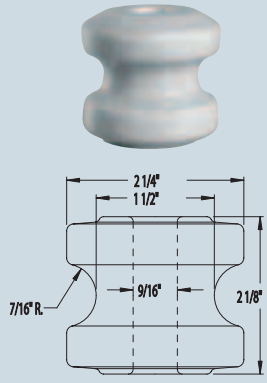

No. 5107

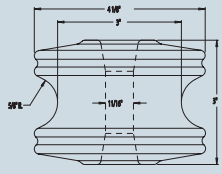

No. 5119

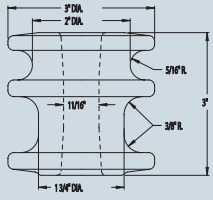

No. 5102

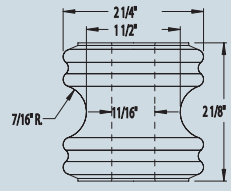

No. 5112

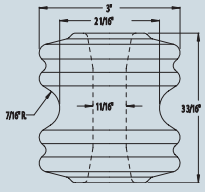

No. 5104

Mechanical And Electrical Characteristics

Catalog Number	ANSI	Ultimate Strength	Low Frequency Flashover - kV			Approximate Net Weight (lbs.)	Standard Package Quantity
			Dry	Wet			
	Class	lbs.		Vertical	Horizontal	Per 100 Pcs.	
†5101	53-2	3000	25	12	15	120	50
5102	N/A	3000	20	10	12	110	50
5104	53-3	4000	25	12	15	135	50
†5107	N/A	1750	18	7	9	45	100
5112	53-1	2000	20	8	10	50	100
5116	53-5	6000	35	18	25	260	25
†5119	53-4	4500	25	12	15	252	25

† REA Accepted
Standard Glaze "Skyline" ANSI-70, Munsell 5 BG 7.0/0.4

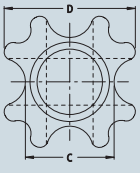

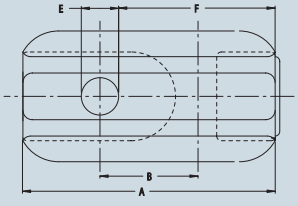

No. 708

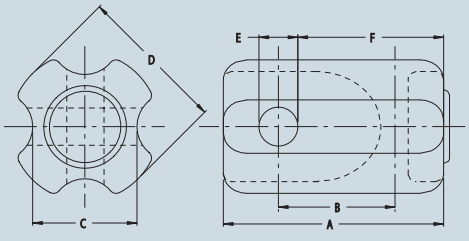

No. 502-504-506

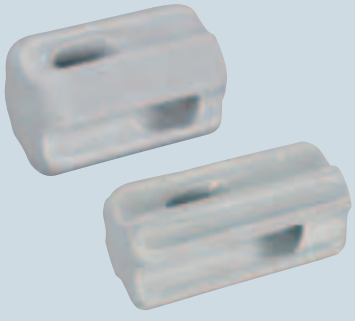

Catalog Number	ANSI Class	Tensile Strength	Low Frequency Flashover kV		Leakage Distance	Maximum Cable Dia.	Dimensions (inches)						Approximate Net Weight (lbs.)	Standard Package Quantity
		lbs.	Dry	Wet	Inches	Inches	A	B	C	D	E	F	Per 100 Pcs.	
†502	54-1	10000	25	12	1 5/8"	3/8"	3 1/2"	1 3/4"	1 3/4"	2 1/2"	5/8"	2 5/16"	112	50
†504	54-2	12000	30	15	1 7/8"	1/2"	4 1/4"	2 1/4"	2 1/8"	2 7/8"	7/8"	2 13/16"	188	25
†506	54-3	20000	35	18	2 1/4"	5/8"	5 1/2"	3 1/8"	2 3/8"	3 3/8"	1"	3 13/16"	296	25
†508	54-4	20000	40	23	3"	5/8"	6 3/4"	2 5/8"	2 3/8"	3 1/2"	1"	4 1/2"	475	20

† REA Accepted
Standard Glaze "Skyline" ANSI-70, Munsell 5 BG 7.0/0.4

T&D Insulators

Cross Reference Guide

The comparative catalog numbers are intended as a guide only. It is recommended that each item be further identified by referring to that item in this catalog. All possible care has been exercised in preparing this Cross Reference Guide; however, we cannot assume responsibilities for discrepancies.

Suspension And Dead-End Insulators

ANSI Class Number	PPC Insulators	Ohio Brass	NGK (Locke)	Lapp	Joslyn (Pinco)	A.B. Chance	McGraw Edison	Victor
52-1	86012	32433	16583	6605 G	L 1510	C 907-1001		804
52-1	86046			6605 H	C 907-1211	804-40		
52-2	87512	32435			L 600			801
52-3	81022	32440	205840	8200	L 2060	C 907-1003		900
52-4	81012	32439	205580	8100	L 2070	C 907-1004		800
52-9	20034	47399		6815 G	74002	C 907-1209		877
52-9	20046					C 907-1210		877-40
52-9	84300	42399	16044	6815	L 1814	C 907-1009		817
	20122							
	20166					C 907-1704		
	84166					C 907-1604		

Tie-Top Line Post Insulators And Studs

ANSI Class Number	PPC Insulators	Ohio Brass	NGK (Locke)	Lapp	Joslyn (Pinco)	A.B. Chance	McGraw Edison	Victor
	5015	37600		4315 X		C 903-1710		
	5020	43400		4320 X		C 903-1711		
	5025							
	5027	43401		4327 X		C 903-1712		
	5035			4335 X				
	5045							
	5115			4315 -PX		C 903-1910		
	5120			4320 -PX		C 903-1911		2120
57-1	5125	37610		9325 X		C 903-1813		2025
	5127	47101		4327 -PX		C 903-1912		2127
57-2	5135	37620		9335 X		C 903-1814		62055
57-3	5145	41640		9345 X		C 903-1815		62056
	Studs							
	6500	87563		301613		C 903-9507		72090
	6502	87573		301614		C 903-9508		72088
	6510	87564		11612 A		C 903-9514		72091
	6512	87574		10187 A		C 903-9517		72087

PinType Insulators

ANSI Class Number	PPC Insulators	Ohio Brass	NGK (Locke)	Lapp	Joslyn (Pinco)	A.B. Chance	McGraw Edison	Victor
55-1	237	29207			L 62	C 905-1001		4
55-1	237 -S					C 905-1301		
55-2	253	12847			L 223	C 905-1002	NP 8D7	8
55-2	253 -S				L 223 R	C 905-1302	NP 8D8	8 R
55-3	261				L 63	C 905-1003	NP 9D7	5
55-3	261 -S	38148			L 63 R	C 905-1303	NP 9D8	5 R
55-4	366				L 2064	C 905-1004	NP 21D7	6
55-4	366 -S	38149			L 2064 R	C 905-1304	NP 21D8	6 R
55-5	380				L 367	C 905-1005	NP 22D7	9
55-5	380 -S	38151			L 367 R	C 905-1305	NP 22D8	9 R
55-6	386 -ST					C 905-1306	NP 23D8	11 R
56-1	1027 -S	38246			L 1123 R	C 906-1311		27 R
56-2	2033 -S	38222			L 72 R	C 906-1302		133 R
56-3	2045 -S	38223			L 75 R	C 906-1303		245 R

Guy Strain Insulators

ANSI Class Number	PPC Insulators	Ohio Brass	NGK (Locke)	Lapp	Joslyn (Pinco)	A.B. Chance	McGraw Edison	Victor
54-1	502	31502			L502	C 9090-1041		502
54-2	504	31504			L504	C 909-1042		504
54-3	506	31506			L506	C 909-1043		506
54-4	708	31352			L539	C 909-1044		556

Spool Insulators

ANSI Class Number	PPC Insulators	Ohio Brass	NGK (Locke)	Lapp	Joslyn (Pinco)	A.B. Chance	McGraw Edison	Victor
53-1	5112	36139			J 98	C 909-1031		2011
53-2	5101	36361			J 151	C 909-1032		2012
53-3	5104				J 97	C 909-1033		2013
53-4	5119	38911			J 0101	C 909-1034		2026
53-5	5116	36140			J 0613	C 909-1035		2014
	5107				J 150	C 909-1931		
	5102				J 105	C 909-1932		

www.ppcinsulators.com

CERAM INSULATORS

PP

The very Best.

That's what we deliver.

Only a company that develops, produces and delivers products worldwide can provide the optimal solution for your requirements.

The specialists of **PPC** Insulators are dedicated to supplying you with superior advice and global support. **PPC** Insulators quality products and service provide time-tested value to fulfill your needs!

Please visit us on the web at www.ppcinsulators.com

PPC INSULATORS

Revision 1/2003