benzlers

with you at every turn

Elign Gear Couplings

Flexible Couplings
CEL-2.00GB0312

PRODUCTS IN THE RANGE

Serving an entire spectrum of mechanical drive applications from food, energy, mining and metal; to automotive, aerospace and marine propulsion, we are here to make a positive difference to the supply of drive solutions.

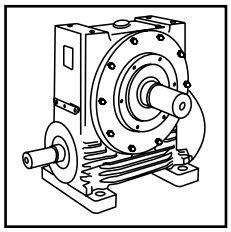

Series A
Worm Gear units and geared motors in single & double reduction types

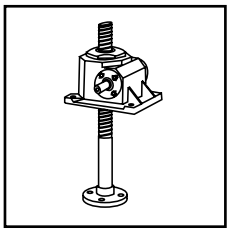

Series BD
Screwjack worm gear unit

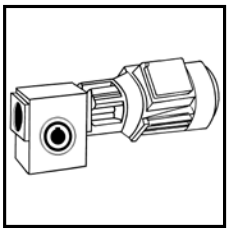

Series BS
Worm gear unit

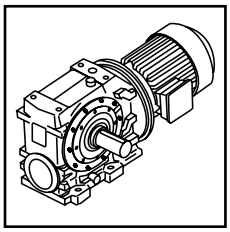

Series C
Right angle drive helical worm geared motors & reducers

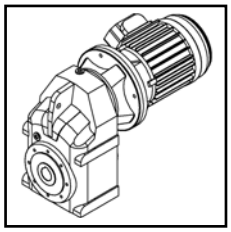

Series F
Parallel angle helical bevel helical geared motors & reducers

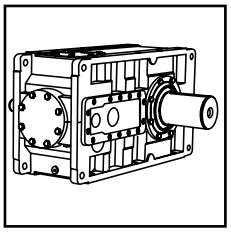

Series G
Helical parallel shaft & bevel helical right angle drive gear units

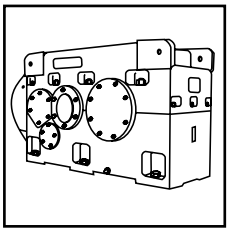

Series H
Large helical parallel shaft & bevel helical right angle drive units

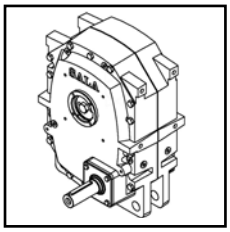

Series J
Shaft mounted helical speed reducers

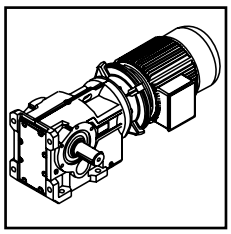

Series K
Right angle helical bevel helical geared motors & reducers

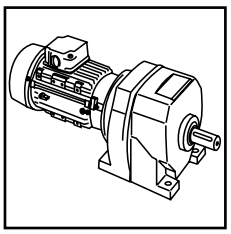

Series M
In-line helical geared motors & reducers

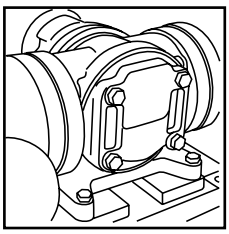

Roloid Gear Pump
Lubrication and fluid transportation pump

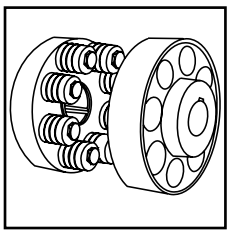

Series X
Cone Ring
Pin and bush elastomer coupling

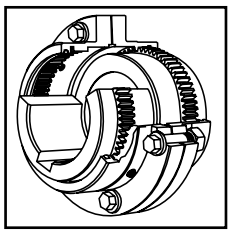

Series X
Gear
Torsionally rigid, high torque coupling

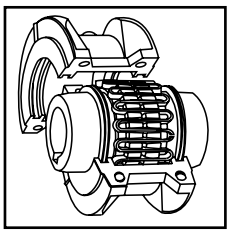

Series X
Grid
Double flexing steel grid coupling

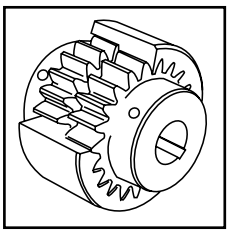

Series X
Nylicon
Gear coupling with nylon sleeve

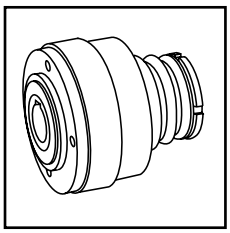

Series X
Torque Limiter
Overload protection device

We offer a wide range of repair services and many years experience of repairing demanding and highly critical transmissions in numerous industries.

We can create custom engineered transmission solutions of any size and configuration.

INTRODUCTION

GEAR COUPLINGS

A Gear Coupling is used to join two rotating shafts for efficient transmission of mechanical power. Although the shafts are accurately aligned at the time of installation, it is likely that during the operation the alignment may get disturbed due to setting of foundation, thermal expansion, shaft deflection, wearing out of other parts, improper maintenance and many more reasons. Due to this unavoidable misalignment occurring during the operation a gear coupling provides a better solution to compensate or minimise the effect of misalignment. The gear Couplings are therefore ideally suited for wide range of application in the entire field of drive technology.

MISALIGNMENT

The main function of any Gear coupling is not only to connect two rotating shafts but also to accommodate misalignments of the connecting shafts ELIGN Gear coupling accommodates the following three types of misalignment.

A. Radial

When axes of connected shafts are parallel but not in the same straight line.

B. Angular

When axes of connected shafts intersect at the centre point of the coupling but not in the same straight line.

C. Combined radial and angular.

When the axes of connected shafts do not intersect at the point of the coupling and are not parallel.

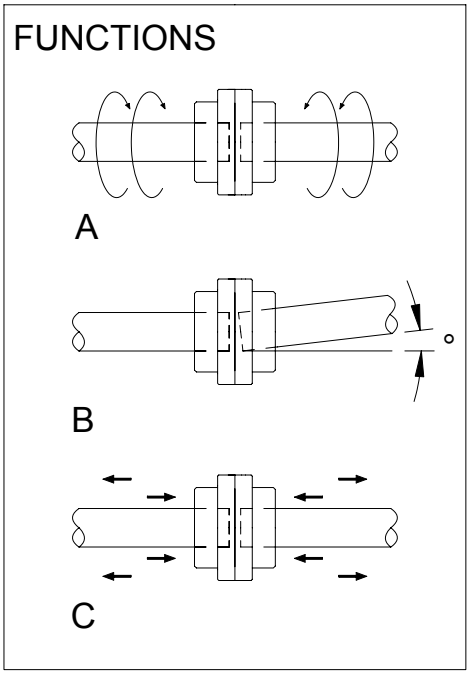

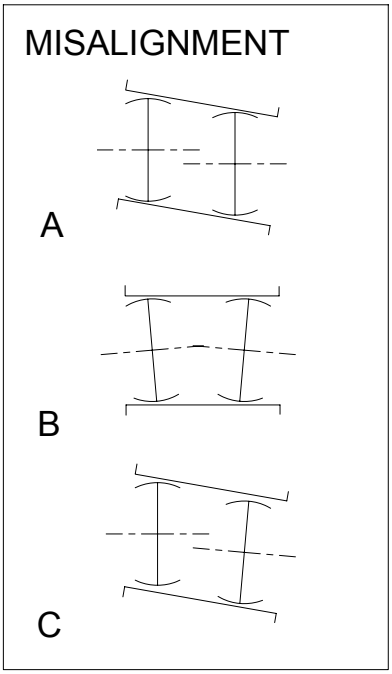

Besides the above three types of misalignment, the ELIGN Gear coupling range also permit axial movement of the shaft.

CAUTION.

Normally permissible angular misalignment of ELIGN gear coupling is 0.75 for each half. However, it does not mean that the misalignment should be permitted to this limit from the initial installation. Since misalignment can occur during operation the Elign gear coupling takes care of this without undue damage to the connected equipment. However the coupling's life may reduce due to relative motion between hub teeth and housing teeth causing increased wear on the teeth. It is therefore extremely important to align the interconnecting shafts precisely during initial installation.

FEATURES OF ELIGN COUPLINGS

ELIGN Gear coupling consists of hubs with multi crowned teeth at Flank, tip and chamfering on teeth.

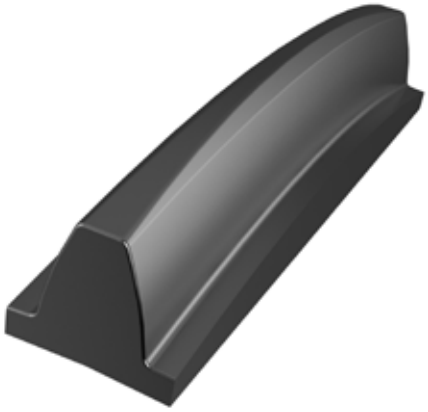

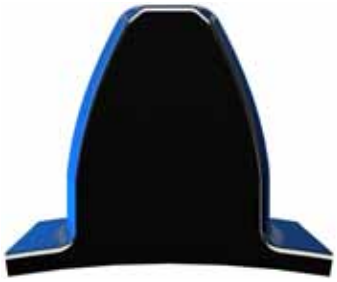

Crowned Flanks: The flanks of the teeth are crowned so that the tooth thickness is greatest at that centre of the tooth. This ensures a larger contact area per tooth for higher torque requirements and puts more teeth in contact for the given angle. Actual tooth loading takes place near the centre of the tooth face where tooth thickness is greatest, Crowned flanks also eliminate end-of-tooth loading, provide optimal load distribution, and accommodate all types of misalignment with minimum backlash.

Crowned Tips: The tips of the teeth are crowned. The crowned tip contacts the root of the internal gear teeth in the external sleeve, accurately piloting the sleeve with true concentric ball-and-socket action. This allows minimum diametral sleeve clearance and centres the sleeve physically to ensure a good dynamic balance under various loading and misalignment conditions.

Crowned Chamfers: The faces of the teeth are adjacent to the tips and are chamfered to eliminate interference with the sleeve tooth fillets. This allows the true involute flanks of the gear teeth to be in contact with the sleeve teeth and ensures freedom to misalign.

The hub teeth are manufactured using the latest state of the art CNC machines. The hub is the heart of any gear coupling and a superior design and tooth profile of the hub enables the gear coupling to operate satisfactorily under all operating conditions with increased reliability and durability.

The multi crowned teeth also reduce the alignment adjustment and improve the load carrying capacity of the teeth. The backlash between the teeth is minimal due to the multi-crown tooth design a key feature for the Elign coupling range.

The ELIGN gear coupling is a simple, compact and light unit for transmitting the same power when compered to the couplings of similar capacity available in the market. It is manufactured out of tested quality forged carbon steel and passes through a number of quality checks. Each half of the ELIGN gear coupling is interchangeable with any of other half, of the same size of coupling.

SELECTION INFORMATION

SELECTION

1. Obtain Shaft Sizes, compare shaft sizes of driving and driven equipment with listed maximum bores of desired series or type of coupling to determine “tentative” coupling size.

2. Compute effective kW/rpm or torque to be transmitted and select a service factor from the following tables.

Determine kW/rpm (effective) $= \frac{\text{kW TRANSMITTED X SERVICE FACTOR}}{\text{rpm}}$

or determine Torque daNm

Torque (effective) daNm $= \frac{\text{955 X kW TRANSMITTED X SERVICE FACTOR}}{\text{rpm}}$

Confirm “Tentative” Coupling size or increase to a size which has a kW/rpm torque rating equal to or greater than the value created above.

3. Check the maximum speed of the application and refer to maximum speed ratings. These speeds are given only as a guide since the maximum speed depends on the application characteristics.

4. Check space limitations and the dimensions of the selected coupling should be compared with the space provided in the application to ensure proper clearances. Shaft extensions, separation, and clearances to align coupling should be checked.

Lifting Hole
The hubs of the couplings from size ED1600 upwards are supplied with lifting holes to allow for easy lifting of the coupling.

Lubrication
Each coupling half is provided with grease nipple/plug on the housing from where grease can be filled directly.
The couplings are supplied with some quality of grease to facilitate assembly. It is recommended to fill the required quality and quantity of grease before putting the coupling in operation.

Special Protection
All the components of the ELIGN gear couplings have a special rust preventative oil coating, in addition to all the nuts and bolts which are zinc/cadmium plated to further protect against rust & corrosion.

MECHANICAL RATINGS AND SERVICE FACTOR FM

Mechanical ratings measure capacity in terms of life and/or strength, assuming 10 hr/day continuous running under uniform load conditions.

Catalogue ratings allow 100% overload at starting, braking or momentarily during operation up to 10 hours per day.

The unit selected must therefore have a catalogue rating at least equal to half maximum overload.

Mechanical Service Factor Fm (Table 1) is used to modify the actual load according to daily operating time, and type of loading.

Load characteristics for a wide range of applications are detailed in Table 2 opposite, which are used in deciding the appropriate Service Factor Fm from Table 1.

If overloads can be calculated, or accurately assessed, actual loads should be used instead of Fm.

Prime mover	Duration of service hrs per day	Load classification-driven machine		
		Uniform mass acceleration factor < 0.2	Moderate mass acceleration factor < 3	Heavy mass acceleration factor < 10
Electric motor, steam turbine or hydraulic motor	Under 3	0.80	1.00	1.50
	3 to 10	1.00	1.25	1.75
	Over 10	1.25	1.50	2.00
Multi-cylinder internal combustion engine	Under 3	1.00	1.25	1.75
	3 to 10	1.25	1.50	2.00
	Over 10	1.50	1.75	2.25
Single cylinder internal combustion engine	Under 3	1.25	1.50	2.00
	3 to 10	1.50	1.75	2.25
	Over 10	1.75	2.00	2.50

SERVICE FACTORS

Table 2

U = Uniform load

M = Moderate shock load

H = Heavy shock load

† = Refer to Application Engineering

Driven Machine	type of load
Agitators	
pure liquids	U
liquids and solids	M
liquids-variable density	M
Blowers	
centrifugal	U
lobe	M
vane	U
Brewing and distilling	
bottling machinery	M
brew kettles-continuous duty	M
cookers-continuous duty	M
mash tubs-continuous duty	M
scale hopper-frequent starts	M
Can filling machines	M
Cane knifes	M
Car dumpers	H
Car pullers	M
Clarifiers	U
Classifiers	M
Clay working machinery	
brick press	H
briquette machine	H
clay working machinery	M
pug mill	M
Compressors	
centrifugal	U
lobe	M
reciprocating	
multi-cylinder	M
single cylinder	H
Conveyors-uniformly loaded or fed	
apron	U
assembly	U
belt	U
bucket	U
chain	U
flight	U
oven	U
screw	U
Conveyors-heavy duty not uniformly fed	
apron	M
assembly	M
belt	M
bucket	M
chain	M
flight	M
live roll	
oven	M
reciprocating	H
screw	M
shaker	H

Driven Machine	type of load
Cranes	
main hoists	†
bridge travel	†
trolley travel	†
Crusher	
ore	H
stone	H
sugar	H
Dredges	
cable reels	M
conveyors	M
cutter head drives	H
jig drives	H
manoeuvring winches	M
pumps	M
screen drive	H
stackers	M
utility winches	M
Dry dock cranes	
main hoist	†
auxiliary hoist	†
boom, luffing	†
rotating, swing or slew	†
tracking, drive wheels	†
Elevators	
bucket-uniform load	U
bucket-heavy load	M
bucket-continuous	U
centrifugal discharge	U
escalators	U
freight	M
gravity discharge	U
man lifts	†
passenger	†
Fans	
centrifugal	U
cooling towers	
induced draft	†
forced draft	†
induced draft	M
large, mine, etc	M
large, industrial	M
light, small diameter	U
Feeders	
apron	M
belt	M
disc	U
reciprocating	H
screw	M
Food industry	
beef slicer	M
cereal cooker	U
dough mixer	M
meat grinders	M
Generators-not welding	U
Hammer mills	H
Hoists	
heavy duty	H
medium duty	M
skip hoist	M
Laundry washers	
reversing	M
Laundry tumblers	M
Line shafts	
driving processing equipment	M
light	U
other line shafts	U
Lumber industry	
barkers-hydraulic-mechanical	M
burner conveyor	M
chain saw and drag saw	H
chain transfer	H
craneway transfer	H
de-barking drum	H
edger feed	M
gang feed	M
green chain	M
live rolls	H
log deck	H

Driven Machine	type of load
log haul-incline	H
log haul-well type	H
log turning device	H
main log conveyor	H
off bearing rolls	M
planer feed chains	M
planer floor chains	M
planer tilting hoist	M
re-saw merry-go-round conveyor	M
roll cases	H
slab conveyor	H
small waste conveyor-belt	U
small waste conveyor-chain	M
sorting table	M
tipple hoist conveyor	M
tipple hoist drive	M
transfer conveyors	M
transfer rolls	M
tray drive	M
trimmer feed	M
waste conveyor	M
Machine tools	
bending roll	M
punch press-gear driven	H
notching press- belt driven	†
plate planers	H
tapping machine	H
other machine tools	
main drives	M
auxiliary drives	U
Metal mills	
draw bench carriage and main drive	M
pinch, dryer and scrubber rolls-reversing	†
slitters	M
table conveyors	
non-reversing	
group drives	M
individual drives	H
reversing	
wire drawing and flattening machine	M
wire winding machine	M
Mill-rotary type	
ball	H
cement kilns	H
dryers and coolers	H
kilns, other than cement	H
pebble	H
rod	
plain	H
wedge bar	H
tumbling barrels	H
Mixers	
concrete mixers -continuous	M
concrete mixers -intermittent	M
constant density	U
variable density	M
Oil industry	
chillers	M
oil well pumping	
paraffin filter press	M
rotary kilns	M
Paper mills	
agitators, (mixers)	M
barker-auxiliaries-hydraulic	M
barker-mechanical	H
barking drum	H
beater and pulper	M
bleacher	U
calenders	M
calenders-super	H
converting machine, except cutters, platers	M
conveyors	U
couch	M
cutters-plates	H
cylinders	M
dryers	M
felt stretcher	M
felt whipper	H
jordans	M

Driven Machine	type of load
log haul	H
presses	M
pulp machine reel	M
stock chest	M
suction roll	M
washers and thickeners	M
winders	M
Printing presses	†
Pullers	
barge haul	H
Pumps	
centrifugal	U
proportioning	M
reciprocating	
single acting; 3 or more cylinders	M
double acting; 2 or more cylinders	M
single acting; 1 or 2 cylinders	†
double acting; single cylinder	†
rotary	
gear type	U
lobe, vane	U
Rubber and plastics industries	
crackers	H
laboratory equipment	M
mixed mills	H
refiners	M
rubber calenders	M
rubber mill-2 on line	M
rubber mill-3 on line	M
sheeter	M
tire building machines	†
tire and tube press	
openers	†
tubers and strainers	M
warming mills	M
Sand muller	M
Sewage disposal equipment	
bar screens	U
chemical feeders	U
collectors	U
dewatering screws	M
scum breakers	M
slow or rapid mixers	M
thickeners	M
vacuum filters	M
Screens	
air washing	U
rotary-stone or gravel	M
travelling water intake	U
Slab pushers	M
Steering gear	
Stokers	U
Sugar industry	
cane knives	M
crushers	M
mills	M
Textile industry	
batchers	M
calenders	M
cards	M
dry cans	M
dryers	M
dyeing machinery	M
knitting machines	
looms	M
mangles	M
nappers	M
pads	M
range drives	
slashers	M
soapers	M
spinners	M
tenter frames	M
washers	M
winders	M
Windlass	

TYPES OF ELIGN GEAR COUPLINGS

The following types are available

Type ED

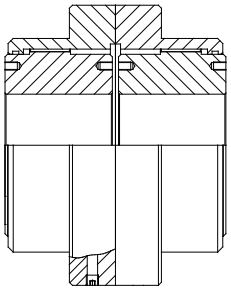

Double Engagement

The couplings are available with bore limitations up to 540 mm and torque ratings up to 110,000 daNm

Type ER

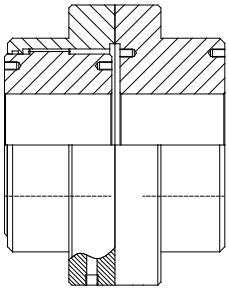

Single Engagement

The couplings are available with bore limitations up to 370 mm one side and 410 mm on the rigid end and torque ratings up to 45,000 da Nm.

Type ET

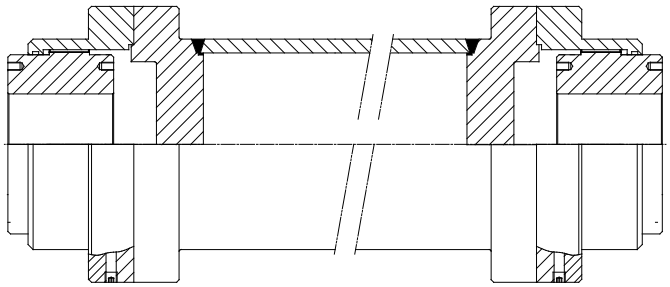

Spacer Type

The couplings are available with bore limitations up to 540 mm and torque ratings up to 110,000 da Nm

Type EV

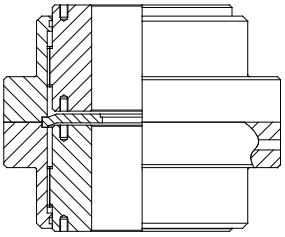

Vertical Type

The couplings are available with bore limitations up to 275 mm and torque ratings up to 17,400 da Nm

Type ES

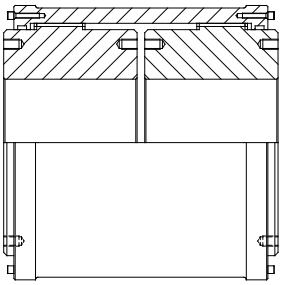

Continuous Sleeve

The couplings are available with bore limitations from 40 mm to 275 mm and torque ratings from 1,600 da Nm up to 17,400 da Nm

Multi Crowned Toothed Couplings For Shaft Connections Type ED

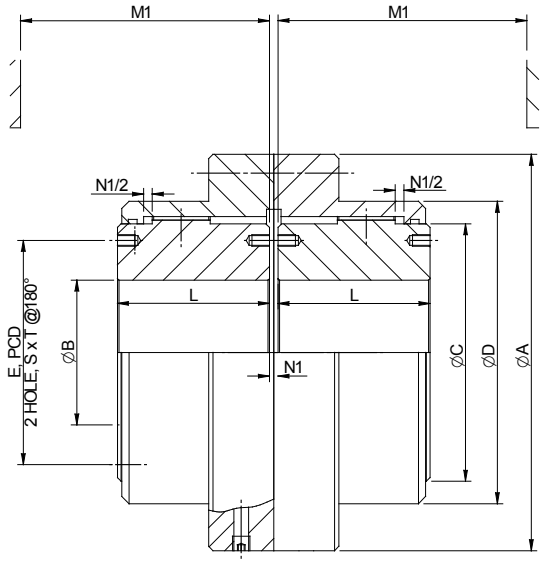

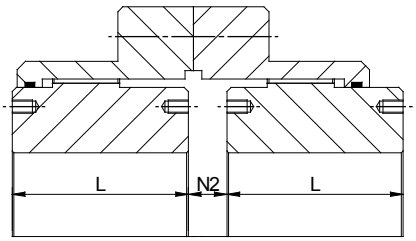

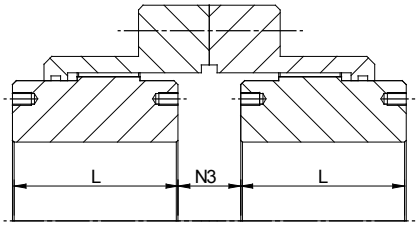

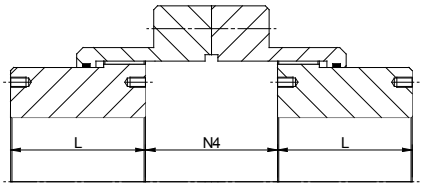

Size TkN Continuous	Tk max shock	PkN n conti.	Diameter						Length						Tapping		Misalignment		Weight	Moments of Inertia	Maximum ADM Speed
			A	B			C	D	L	M1	N1	N2	N3	N4	E	SxT					
				pilot	min.	Maxi															
daNm	daNm	kW/rpm	mm						mm						mm		Degree	± mm	kg	(kgm2)	1/min
ED130	260	0.136	111	10	15	45	67	80	43	74	3	12	21	43	-	-	2x0.75	0.35	4	0.005	7000
ED280	560	0.293	141	15	20	60	87	103.5	50	84	3	9	15	45	-	-	2x0.75	0.4	7	0.015	6200
ED500	1000	0.524	171	25	30	75	106	129.5	62	105	3	17	31	63	-	-	2x0.75	0.5	14	0.039	5650
ED1000	2000	1.047	210	30	35	95	130	156	76	123	5	17	29	74	-	-	2x0.75	0.6	25	0.101	5100
ED1600	3200	1.675	234	35	40	110	151	181	90	148	5	19	33	86	130	M8x12	2x0.75	0.7	37	0.188	4700
ED2200	4400	2.304	274	50	55	130	178	209	105	172	6	23	40	103	155	M8x12	2x0.75	0.9	60	0.431	4350
ED3200	6400	3.351	312	60	65	155	213	247	120	193	6	24	42	116	185	M10x15	2x0.75	1	90	0.845	4000
ED4500	9000	4.712	337	75	80	175	235	273	135	215	8	29	50	130	205	M12x18	2x0.75	1.1	118	1.322	3800
ED6200	12400	6.492	380	85	90	195	263	307	150	241	8	32	56	144	226	M16x24	2x0.75	1.2	169	2.45	3600
ED8400	16800	8.796	405	95	100	215	286	338	175	279	8	39	70	170	250	M16x24	2x0.75	1.4	224	3.72	3450
ED11500	23000	12.042	444	115	120	240	316	368	190	304	8	46	84	188	276	M16x24	2x0.75	1.5	277	5.39	3300
ED17400	34800	18.221	506	145	150	275	372	426	220	339	10	42	74	204	330	M20x30	2x0.75	1.7	414	10.88	3050

1 SPACE REQUIRED TO CHANGE THE SEAL
2 KEYWAYS ACCORDING TO DIN:6885PART-1
3 MAXIMUM ANGULAR MISALIGNMENT PER COUPLING HALF 0.75
4 WEIGHT & MOMENT OF INERTIA BASED ON PILOT BORE CONDITION.
5 CONTINUOUS TORQUE RATING SUBJECT TO ACCURATE ALIGNMENT OF CONNECTING SHAFTS.
6 FOR A HIGHER SIZE REQUIREMENT, PLEASE CONTACT APPLICATION ENGINEERING.

In accordance with our established policy to constantly improve our products, these specifications are subject to change without notice

TYPE ED (SUPER SERIES)

Multi Crowned Toothed Couplings For Shaft Connections Type ED (SUPER SERIES)

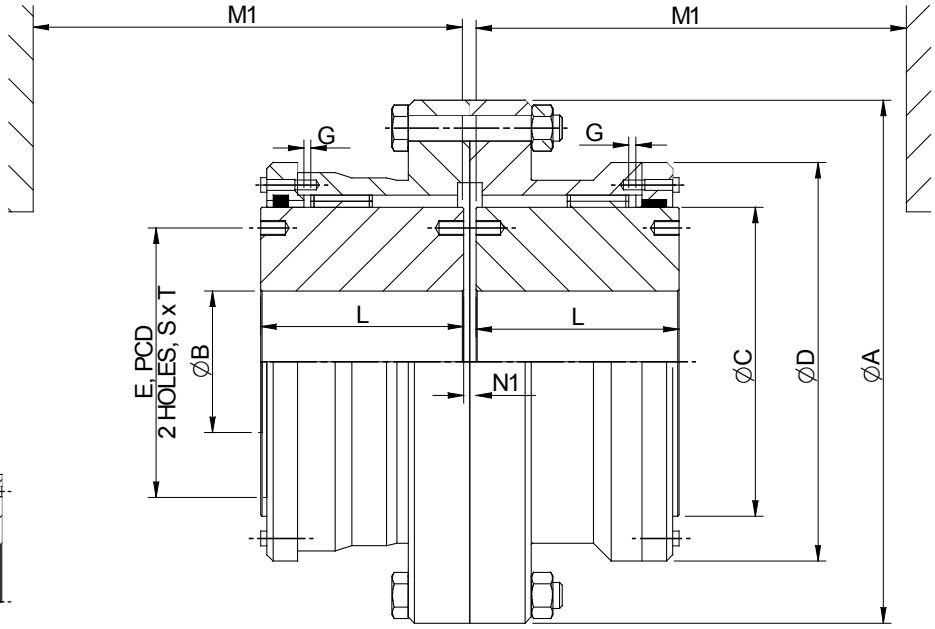

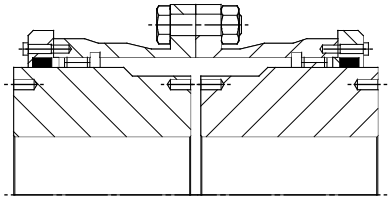

ARRANGEMENT FOR ED 75000 AND ONWARDS

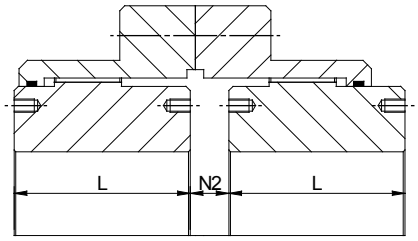

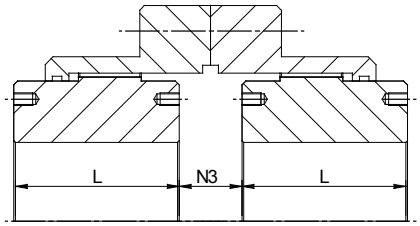

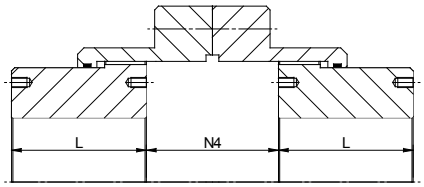

Size TkN Continuous	Tk max shock	PkN / n conti.	Diameter						Length						Tapping		Misalignment		Weight kg	Moments of Inertia (kgm2)	Maximum ADM Speed 1/min
			A	B pilot	B min.	B Maxi	C	D	L	M1	N1	N2	N3	N4	E	SxT	α	α			
daNm	daNm	kW/rpm	mm						mm								degree	± mm	kg	(kgm2)	1/min
ED 25200	50400	26.39	632	155	160	310	422	550	280	10	15	119	223	346	360	M20x30	2x0.75	1.8	670	26.75	1830
ED 29000	58000	30.366	640	195	200	320	432	518	292	6.5	13	33	53	255	380	M20x30	2x0.75	2.1	760	31	1800
ED 37000	74000	38.746	715	205	210	355	472	616	310	12	20	133	246	383	410	M24x40	2x0.75	2.2	930	48	1460
ED 45000	90000	47.123	750	225	230	370	502	648	330	11.5	20	144	268	408	435	M24x40	2x0.75	2.2	1110	65.8	1395
ED 56000	112000	58.639	804	275	280	450	594	682	350	6.5	13	61	109	335	544	M24x40	2x0.75	2.7	1532	105	1300
ED 75000	150000	78.539	910	285	290	480	620	812	410	10.5	25	121	217	*	550	M36x55	2x0.75	3	2180	198	1000
ED 90000	180000	94.247	980	315	320	515	670	860	430	15.5	25	102	179	*	585	M36x55	2x0.75	3	2520	265	940
ED 110000	220000	115.19	1020	325	330	540	700	908	450	16	25	97	169	*	615	M36x55	2x0.75	4	2910	333	900

1. SPACE REQUIRED TO CHANGE THE SEAL
2. KEYWAYS ACCORDING TO DIN:6885 PART-1
3. MAXIMUM ANGULAR MISALIGNMENT PER COUPLING HALF 0.75
4. WEIGHT & MOMENT OF INERTIA BASED ON PILOT BORE CONDITION.
5. CONTINUOUS TORQUE RATING SUBJECT TO ACCURATE ALIGNMENT OF CONNECTING SHAFTS.
6. FOR A HIGHER SIZE REQUIREMENT, PLEASE CONTACT APPLICATION ENGINEERING.
7. FOR MARKED DIMENSIONS, PLEASE CONTACT APPLICATION ENGINEERING.

In accordance with our established policy to constantly improve our products, these specifications are subject to change without notice.

Multi Crowned Toothed Couplings For Shaft Connections Type ER

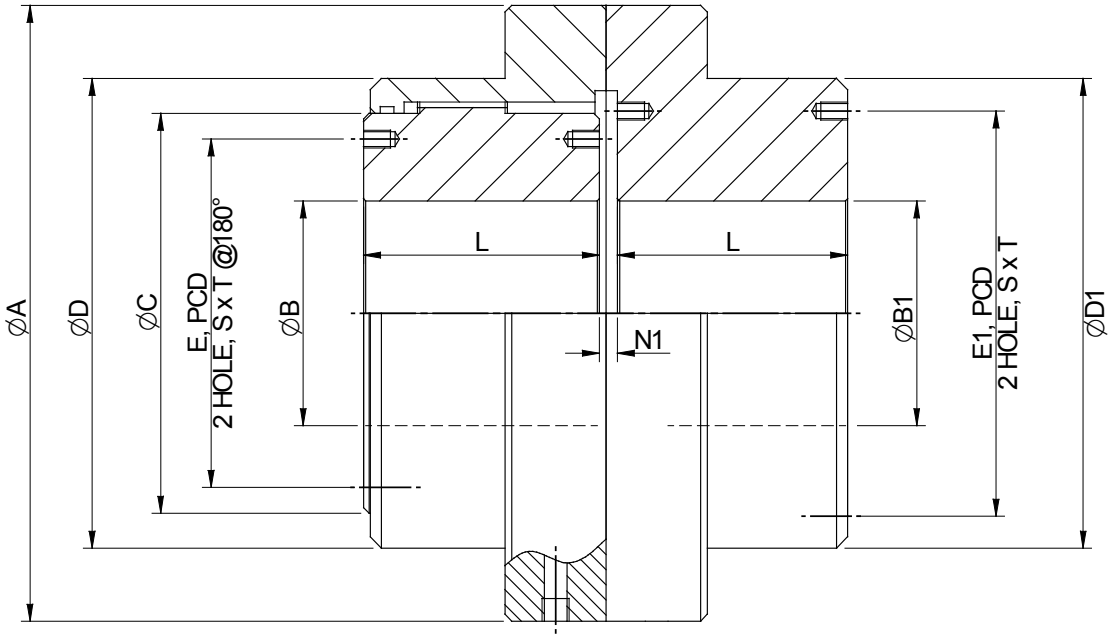

Size TkN Continuous	Tk max shock	PkN / n conti.	Diameter										Length				Tapping				Weight	Moments of Inertia	Maximum ADM Speed
			A	B			B1			C	D	D1	L	L1	M1	N1	E	E1	SxT				
				pilot	min.	Maxi	pilot	min.	Maxi														
daNm	daNm	kW/rpm	mm										mm				mm			degree	Kg	j (kgm2)	1/min
ER 130	260	0.136	111	10	15	45	10	15	55	67	80	80	43	40	74	5	-	-	-	0.75	4	0.005	7000
ER 280	560	0.293	141	15	20	60	15	20	75	87	103.5	103.5	50	47	84	5	-	-	-	0.75	8	0.015	6200
ER 500	1000	0.524	171	25	30	75	25	30	95	106	129.5	126	62	58	105	5	-	-	-	0.75	14	0.039	5650
ER 1000	2000	1.047	210	30	35	95	30	35	110	130	156	152	76	74	123	6	-	-	-	0.75	26	0.102	5100
ER 1600	3200	1.675	234	35	40	110	35	40	130	151	181	178	90	87	148	6	130	155	M8x12	0.75	38	0.196	4700
ER 2200	4400	2.304	274	50	55	130	50	55	155	178	209	208	105	101	172	6.5	155	180	M8x12	0.75	61	0.45	4350
ER 3200	6400	3.351	312	60	65	155	60	65	180	213	247	245	120	113	193	6.5	185	210	M10x15	0.75	91	0.871	4000
ER 4500	9000	4.712	337	75	80	175	75	80	200	235	273	270	135	129	215	8	205	235	M12x18	0.75	120	1.368	3800
ER 6200	12400	6.492	380	85	90	195	85	90	230	263	307	305	150	150	241	8	226	265	M16x24	0.75	175	2.586	3600
ER 8400	16800	8.796	405	95	100	215	95	100	250	286	338	330	175	175	279	8	250	290	M16x24	0.75	232	3.91	3450
ER 11500	23000	12.042	444	115	120	240	115	120	280	316	368	362	190	190	304	10	276	320	M16x24	0.75	287	5.655	3300
ER 17400	34800	18.221	506	145	150	275	145	150	330	372	426	416	220	220	339	13	330	370	M20x30	0.75	430	11.5	3050

1 SPACE REQUIRED TO CHANGE THE SEAL
2 KEYWAYS ACCORDING TO DIN:6885 PART-1
3 MAXIMUM ANGULAR MISALIGNMENT 0.75
4 WEIGHT & MOMENT OF INERTIA BASED ON PILOT BORE CONDITION.
5 CONTINUOUS TORQUE RATING SUBJECT TO ACCURATE ALIGNMENT OF CONNECTING SHAFTS.
6 FOR A HIGHER SIZE REQUIREMENT, PLEASE CONTACT APPLICATION ENGINEERING..

In accordance with our established policy to constantly improve our products, these specifications are subject to change without notice.

TYPE ER (SUPER SERIES)

Multi Crowned Toothed Couplings For Shaft Connections Type ER (SUPER SERIES)

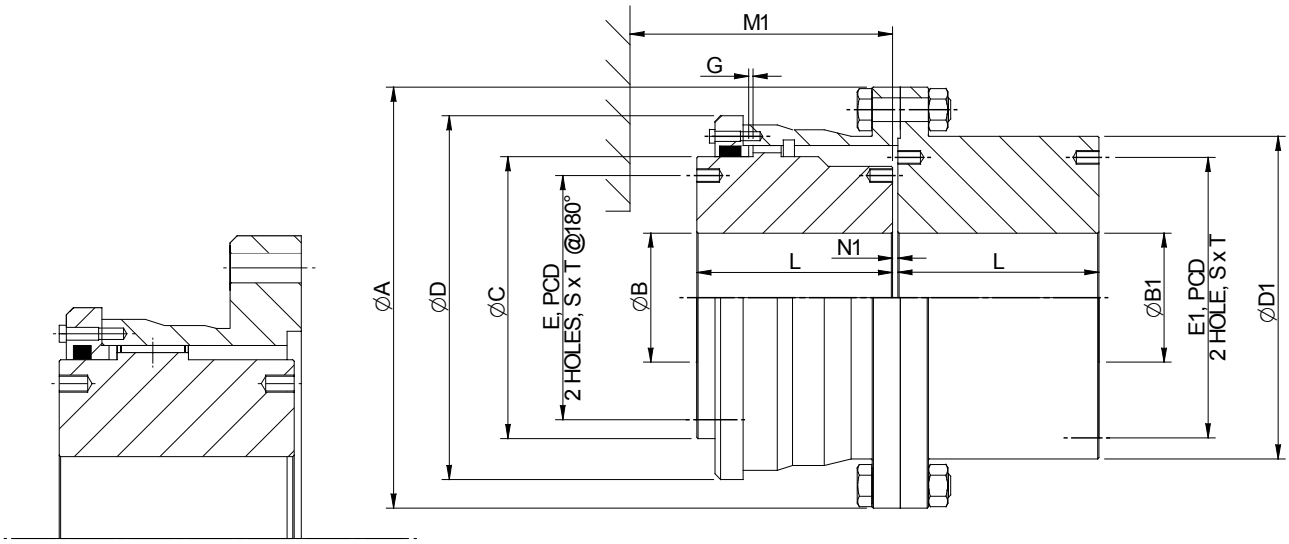

SHAPE OF GEAR HALF FOR
COUPLING SIZE 290000

Size TkN Continuous	Tk max shock	PkN / n conti.	Diameter										Length					Tapping				Weight	Moments of Inertia	Maximum ADM Speed
			A	B			B1			C	D	D1	L	G	L1	M1	N1	E	E1	SxT				
				pilot	min.	Maxi	pilot	min.	Maxi															
daNm	daNm	kW/ rpm	mm										mm					mm			Degree	kg	(kgm2)	1/min
ER 25200	50400	26.39	632	155	160	310	155	160	340	422	550	470	280	10	280	335	12	360	395	M20x30	0.75	706	26.17	1830
ER 29000	58000	30.366	640	195	200	320	195	200	365	432	518	512	292	6.5	292	324	14.5	380	455	M20x30	0.75	820	33.53	1880
ER 37000	74000	38.746	715	205	210	355	205	210	380	472	616	535	310	12	310	370	16.5	410	445	M24x40	0.75	984	48.26	1460
ER 45000	90000	47.123	750	225	230	370	225	230	410	502	648	570	330	11.5	330	395	16.5	435	480	M24x40	0.75	1170	64.04	1395

1 SPACE REQUIRED TO CHANGE THE SEAL
2 KEYWAYS ACCORDING TO DIN:6885 PART-1
3 MAXIMUM ANGULAR MISALIGNMENT PER COUPLING HALF 0.75
4 WEIGHT & MOMENT OF INERTIA BASED ON PILOT BORE CONDITION.
5 CONTINUOUS TORQUE RATING SUBJECT TO ACCURATE ALIGNMENT OF CONNECTING SHAFTS.
6 FOR A HIGHER SIZE REQUIREMENT, PLEASE CONTACT APPLICATION ENGINEERING.
7 FOR MARKED DIMENSIONS, PLEASE CONTACT APPLICATION ENGINEERING.

In accordance with our established policy to constantly improve our products, these specifications are subject to change without notice.

Multi Crowned Toothed Couplings For Shaft Connections Type ET

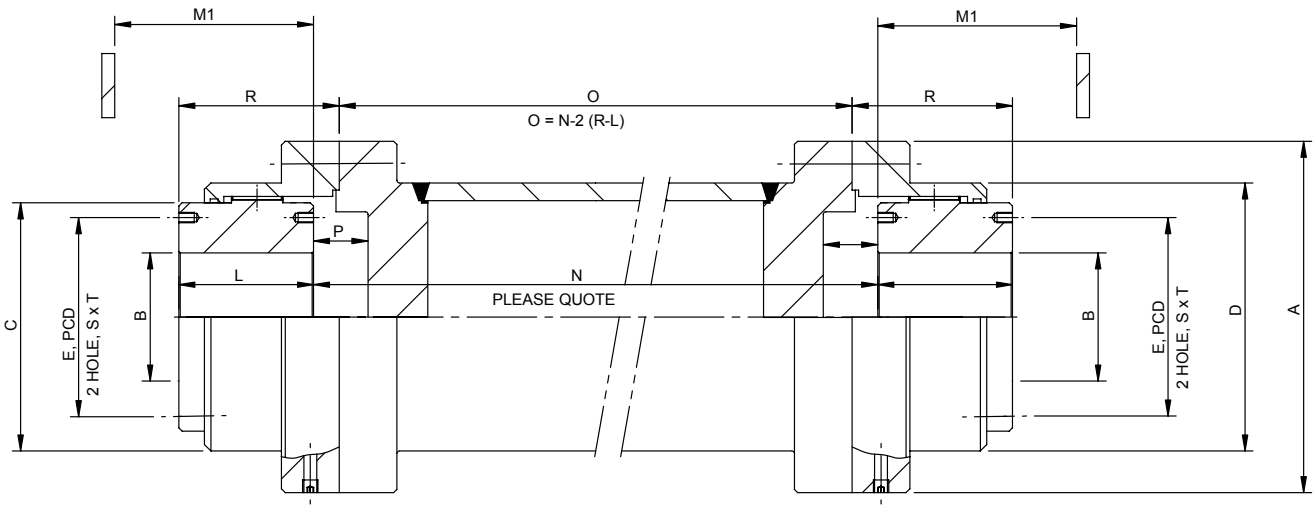

Size TkN Continuous daNm	Tk max shock daNm	PkN n conti.	Diameter						Length				Tapping		Misalignment		Weight	Moments of Inertia	Maximum ADM Speed
			A	B			C	D	L	M1	P	R	E	SxT					
				pilot	min.	Maxi													
daNm	daNm	kW/ rpm	mm						mm				mm		degree		kg	(kgm2)	1/min
ET 130	260	0.136	111	10	15	45	67	80	43	74	16	53.5	-	-	0.75	1.5	4	0.005	LIMITED BY THE CRITICAL SPEED AND WEIGHT OF THE INTERMEDIATE HOLLOW SHAFT
ET 280	560	0.293	141	15	20	60	87	103.5	50	84	13	57.5	-	-	0.75	1.5	8	0.0015	
ET 500	1000	0.524	171	25	30	75	106	129.5	62	104	20	77.5	-	-	0.75	1.5	14	0.039	
ET 1000	2000	1.047	210	30	35	95	130	156	76	123	20	90.5	-	-	0.75	2.5	25	0.101	
ET 1600	3200	1.675	234	35	40	110	151	181	90	148	22	106.5	130	M8x12	0.75	2.5	37	0.188	
ET 2200	4400	2.304	274	50	55	130	178	209	105	172	25	125	155	M8x12	0.75	3	60	0.431	
ET 3200	6400	3.351	312	60	65	155	213	247	120	192	26	141	185	M10x15	0.75	3	90	0.845	
ET 4500	9000	4.712	337	75	80	175	235	273	135	216	31	160	205	M12x18	0.75	4	118	1.322	
ET 6200	12400	6.492	380	85	90	195	263	307	150	241	33	178	226	M16x24	0.75	4	168	2.45	
ET 8400	16800	8.796	405	95	100	215	286	338	175	279	40	210	250	M16x24	0.75	4	224	3.72	
ET 11500	23000	12.042	444	115	120	240	316	368	190	304	47	232	276	M16x24	0.75	4	277	5.39	

1 SPACE REQUIRED TO CHANGE THE SEAL
2 KEYWAYS ACCORDING TO DIN:6885 PART-1
3 MAXIMUM ANGULAR MISALIGNMENT PER COUPLING HALF 0.75
4 WEIGHT & MOMENT OF INERTIA WITHOUT INTERMEDIATE HOLLOW SHAFT.
5 CONTINUOUS TORQUE RATING SUBJECT TO ACCURATE ALIGNMENT OF CONNECTING SHAFTS.
6 FOR A HIGHER SIZE REQUIREMENT, PLEASE CONTACT APPLICATION ENGINEERING.

In accordance with our established policy to constantly improve our products, these specifications are subject to change without notice.

TYPE ET (SUPER SERIES)

Multi Crowned Toothed Couplings For Shaft Connections Type ET (SUPER SERIES)

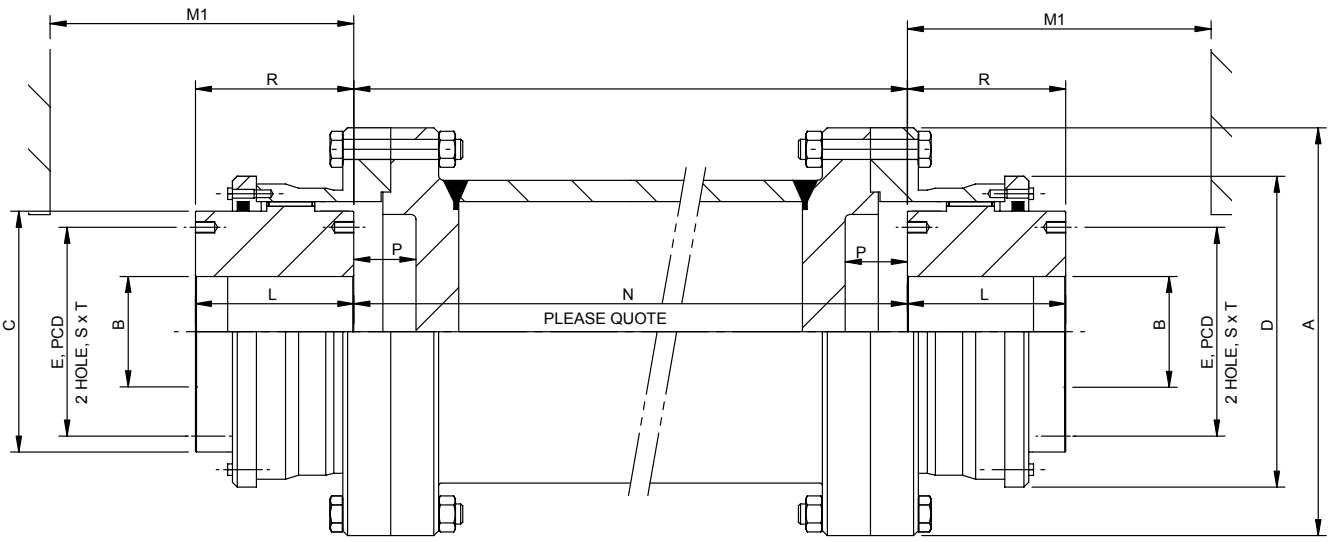

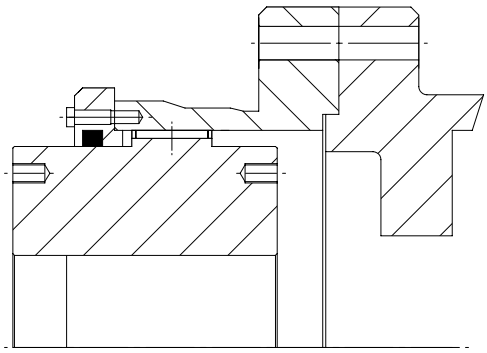

SHAPE OF COUPLING
FOR SIZE 29000 & 56000

Size TkN Continuous daNm	Tk max shock daNm	PkN / n conti.	Diameter						Length				Tapping		Misalignment		Weight kg	Moments of Inertia (kgm2)	Maximum ADM Speed 1/min
			A	B			C	D	L	M1	P	R	E	SxT	α				
				pilot	min.	Maxi													
daNm	daNm	kW/rpm	mm						mm				mm		Degree		kg	(kgm2)	1/min
ET 25200	50400	26.39	632	155	160	310	422	550	280	335	119	391.5	360	M20x30	0.75	10	670	26.75	LIMITED BY THE CRITICAL SPEED AND WEIGHT OF THE INTERMEDIATE HOLLOW SHAFT
ET 29000	58000	30.366	640	195	200	320	432	518	292	324	33	318.5	380	M20x30	0.75	6.5	760	31	
ET 37000	74000	38.746	715	205	210	355	472	616	310	370	133	433	410	M24x40	0.75	12	930	48	
ET 45000	90000	47.123	750	225	230	370	502	648	330	395	144	464	435	M24x40	0.75	11.5	1110	65.8	
ET 56000	112000	58.639	804	275	280	450	594	682	350	379	61	404.5	544	M24x40	0.75	6.5	1532	105	
ET 75000	150000	78.539	910	285	290	480	620	812	410	485	121	521.5	550	M36x55	0.75	10.5	2180	198	
ET 90000	180000	94.247	980	315	320	515	670	860	430	510	102	523.5	585	M36x55	0.75	15.5	2520	265	
ET 110000	220000	115.19	1020	325	330	540	700	908	450	530	97	539.5	615	M36x55	0.75	16	2910	333	

1 SPACE REQUIRED TO CHANGE THE SEAL
2 KEYWAYS ACCORDING TO DIN:6885 PART-1
3 MAXIMUM ANGULAR MISALIGNMENT PER COUPLING HALF 0.75
4 WEIGHT & MOMENT OF INERTIA WITHOUT INTERMEDIATE HOLLOW SHAFT.
5 CONTINUOUS TORQUE RATING SUBJECT TO ACCURATE ALIGNMENT OF CONNECTING SHAFTS.
6 FOR A HIGHER SIZE REQUIREMENT, PLEASE CONTACT APPLICATION ENGINEERING.

In accordance with our established policy to constantly improve our products, these specifications are subject to change without notice.

TYPE EV

Multi Crowned Toothed Couplings For Shaft Connections Type EV

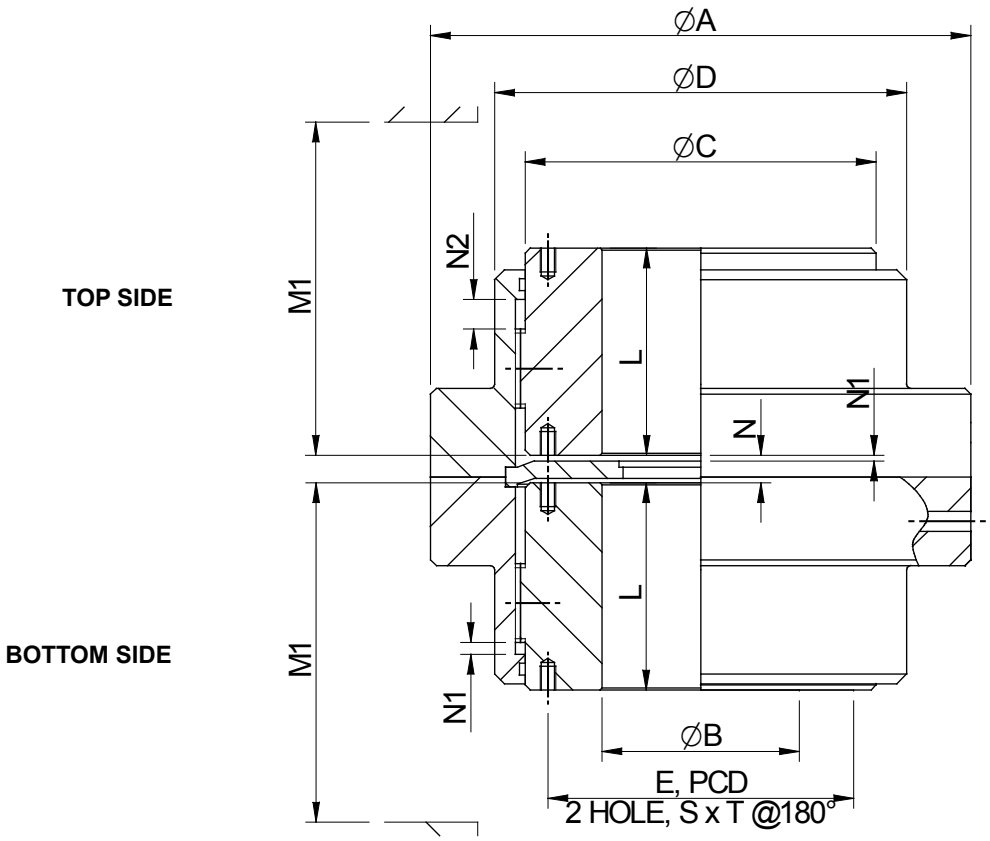

Size TkN Continuous	Tk max shock	PkN / n conti.	Diameter						Length					Tapping		Misalignment		Weight	Moments of Inertia	Maximum ADM Speed
			A	B			C	D	L	M1	N	N1	N2	E	SxT					
				pilot	min.	Maxi														
daNm	daNm	kW/rpm	mm						mm					mm				kg	(kgm2)	1/min
EV 130	260	0.136	111	10	15	45	67	80	43	74	8	1.5	5.5	-	-	2x0.75	0.35	4.5	0.0057	5000
EV 280	560	0.293	141	15	20	60	87	103.5	50	84	5	1.5	5.5	-	-	2X0.75	0.4	8.5	0.017	4400
EV 500	1000	0.524	171	25	30	75	106	129.5	62	105	12.5	1.5	6	-	-	2X0.75	0.5	15	0.043	4000
EV 1000	2000	1.047	210	30	35	95	130	156	76	123	11	2.5	8.5	-	-	2X0.75	0.6	26	0.11	3600
EV 1600	3200	1.675	234	35	40	110	151	181	90	148	13	2.5	8.5	130	M8X12	2X0.75	0.7	39	0.206	3350
EV 2200	4400	2.304	274	50	55	130	178	209	105	172	14	3	12	155	M8X12	2X0.75	0.9	61	0.461	3100
EV 3200	6400	3.351	312	60	65	155	213	247	120	193	15	3	12	185	M10X15	2X0.75	1	93	0.935	2800
EV 4500	9000	4.712	337	75	80	175	235	273	135	215	17	4	16	205	M12X18	2X0.75	1.1	122	1.454	2700
EV 6200	12400	6.492	380	85	90	195	263	307	150	241	20	4	16	226	M16X24	2X0.75	1.2	175	2.71	2550
EV 8400	16800	8.796	405	95	100	215	286	338	175	279	27	4	16	250	M16X24	2X0.5*	0.9	236	4.32	2450
EV 11500	23000	12.042	444	115	120	240	316	368	190	304	34	4	16	276	M16X24	2X0.5*	1	295	6.48	2300
EV 17400	34800	18.221	506	145	150	275	372	426	220	339	28	5	20	330	M20X30	2X0.5*	1.1	430	11	2150

1 SPACE REQUIRED TO CHANGE THE SEAL
2 KEYWAYS ACCORDING TO DIN:6885 PART-1
3 MAXIMUM ANGULAR MISALIGNMENT PER COUPLING HALF 0.75
4 WEIGHT & MOMENT OF INERTIA BASED ON PILOT BORE CONDITION.
5 CONTINUOUS TORQUE RATING SUBJECT TO ACCURATE ALIGNMENT OF CONNECTING SHAFTS.
* MAXIMUM ANGULAR MISALIGNMENT PER COUPLING HALF 0.5
6 FOR A HIGHER SIZE REQUIREMENT, PLEASE CONTACT APPLICATION ENGINEERING.

In accordance with our established policy to constantly improve our products, these specifications are subject to change without notice.

TYPE ES

Multi Crowned Toothed Couplings For Shaft Connections Type ES

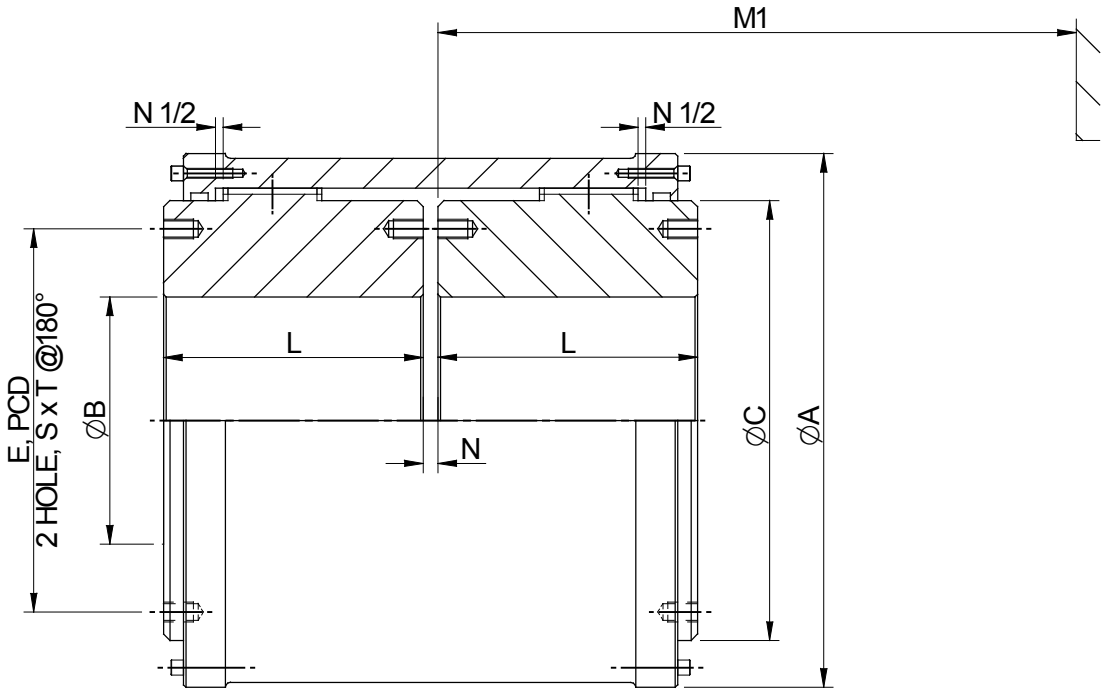

Size TkN Continuous	Tk max shock	PkN n conti.	Diameter					Length			Tapping		Misalignment		Weight kg	Moments of Inertia (kgm2)	Maximum ADM Speed 1/min
			A	B			C	L	M1	N	E	SxT					
				pilot	min.	Maxi											
daNm	daNm	kW/ rpm	mm					mm			mm		Degree		kg	(kgm2)	1/min
ES 1600	3200	1.675	186	35	40	110	151	90	218	5	130	M8x12	2x0.75	0.7	34	0.158	4700
ES 2200	4400	2.304	216	50	55	130	178	105	257	6	155	M8x12	2x0.75	0.9	52	0.332	4350
ES 3200	6400	3.351	254	60	65	155	213	120	289	6	185	M10X15	2X0.75	1	82	0.738	4000
ES 4500	9000	4.712	282	75	80	175	235	135	325	8	205	M12X18	2X0.75	1.1	112	1.255	3800
ES 6200	12400	6.492	317	85	90	195	263	150	358	8	226	M16X24	2X0.75	1.2	154	2.197	3600
ES 8400	16800	8.796	346	95	100	215	286	175	419	8	250	M16X24	2X0.75	1.4	209	3.51	3450
ES 11500	23000	12.042	376	115	120	240	316	190	459	8	276	M16X24	2X0.75	1.5	264	5.352	3300
ES 17400	34800	18.221	436	145	150	275	372	220	513	10	330	M20X30	2X0.75	1.7	398	11	3050

1 SPACE REQUIRED TO CHANGE THE SEAL
2 KEYWAYS ACCORDING TO DIN:6885 PART-1
3 MAXIMUM ANGULAR MISALIGNMENT PER COUPLING HALF 0.75
4 WEIGHT & MOMENT OF INERTIA BASED ON PILOT BORE CONDITION.
5 CONTINUOUS TORQUE RATING SUBJECT TO ACCURATE ALIGNMENT OF CONNECTING SHAFTS.
6 FOR HIGHER SIZE REQUIREMENT PLEASE CONTACT US.

In accordance with our established policy to constantly improve our products, these specifications are subject to change without notice.

CONTACT US

AUSTRALIA

Radicon Transmission (Australia) PTY Ltd
Australia

Tel: +61 488 054 028

EUROPE

Benzler TBA BV
Jachthavenweg 2
NL-5928 NT Venlo

Austria
Tel: +43 7 229 618 91
Fax: +43 7 229 618 84

France
Tel: +33 687 718 711
Fax: +31 77 324 59 01

Germany
Tel: 0800 350 40 00
Fax: 0800 350 40 01

Italy
Tel: +39 02 824 3511

Netherlands & the rest of Europe
Tel: +31 77 324 59 00
Fax: +31 77 324 59 01

DENMARK

Benzler Transmission A/S
Fuglebævej 3D
DK-2770 Kastrup,
Denmark

Tel: +45 36 34 03 00
Fax: +45 36 77 02 42

FINLAND

Oy Benzler AB
Vanha Talvitie 3C
FI-00580 Helsingfors,
Finland

Tel: +358 9 340 1716
Fax: +358 10 296 2072

INDIA

Elecon. Engineering Company Ltd.
Anand Sojitra Road
Vallabh Vidyanagar
388120 Gujarat
India

Tel: +91 2692 23651
Fax: +91 2692 227484

SWEDEN & NORWAY

AB Benzlers
Box 922 (Landskronavägen 1)
251 09 Helsingborg
Sweden

Tel: +46 42 18 68 00
Fax: +46 42 21 88 03

THAILAND

Radicon Transmission (Thailand) Ltd
700/43 Moo 6
Amata Nakorn Industrial Estate
Tumbol Klongtumru
Muang,
Chonburi
20000
Thailand

Tel: +66 3845 9044
Fax: +66 3821 3655

UNITED KINGDOM

Radicon Transmission UK Ltd
Unit J3
Lowfields Business Park,
Lowfields Way, Elland
West Yorkshire, HX5 9DA

Tel: +44 (0) 1484 465 800
Fax: +44 (0) 1484 465 801

USA

Radicon USA Transmission Ltd
1599 Lunt Avenue
Elk Grove Village
Chicago
Illinois
60007
USA

Tel: +1 847 593 9910
Fax: +1 847 593 9950

www.benzlers.com

www.radicon.com








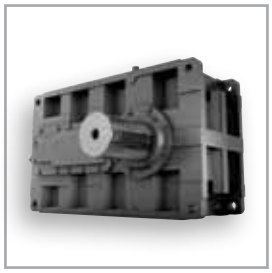



Benzlers

Denmark +45 36 34 03 00
Finland +358 9 340 1716
Germany +49 800-350 4000
Sweden +46 42 186800
The Netherlands +31 77 324 59 00
www.benzlers.com

Radicon

Thailand +66 3845 9044
United Kingdom +44 (0) 1484 465 800
USA +1 847 593 9910
www.radicon.com