FAIRCHILD SEMICONDUCTOR®

MOBILE SOLUTIONS

Complete mobile solutions to assist in your design challenges and accelerate your time-to-market

What do you look for in a technology partner when planning a new mobile design?

If you are like our other customers, which include design engineers, system architects and component engineers from some of the biggest names in the industry, you are looking for the highest energy efficiency, the smallest package sizes available and ICs that will set your designs apart by optimizing the user experience. You need a technology partner with unequalled commitment to meeting your engineering and supply chain requirements. And you need to reduce your design cycle time.

If that sounds like you, you've come to the right place. Through working closely with customers, our design engineers have developed a substantial portfolio of value-added components and continue to introduce leading analog and power IP along with advanced process and packaging technologies.

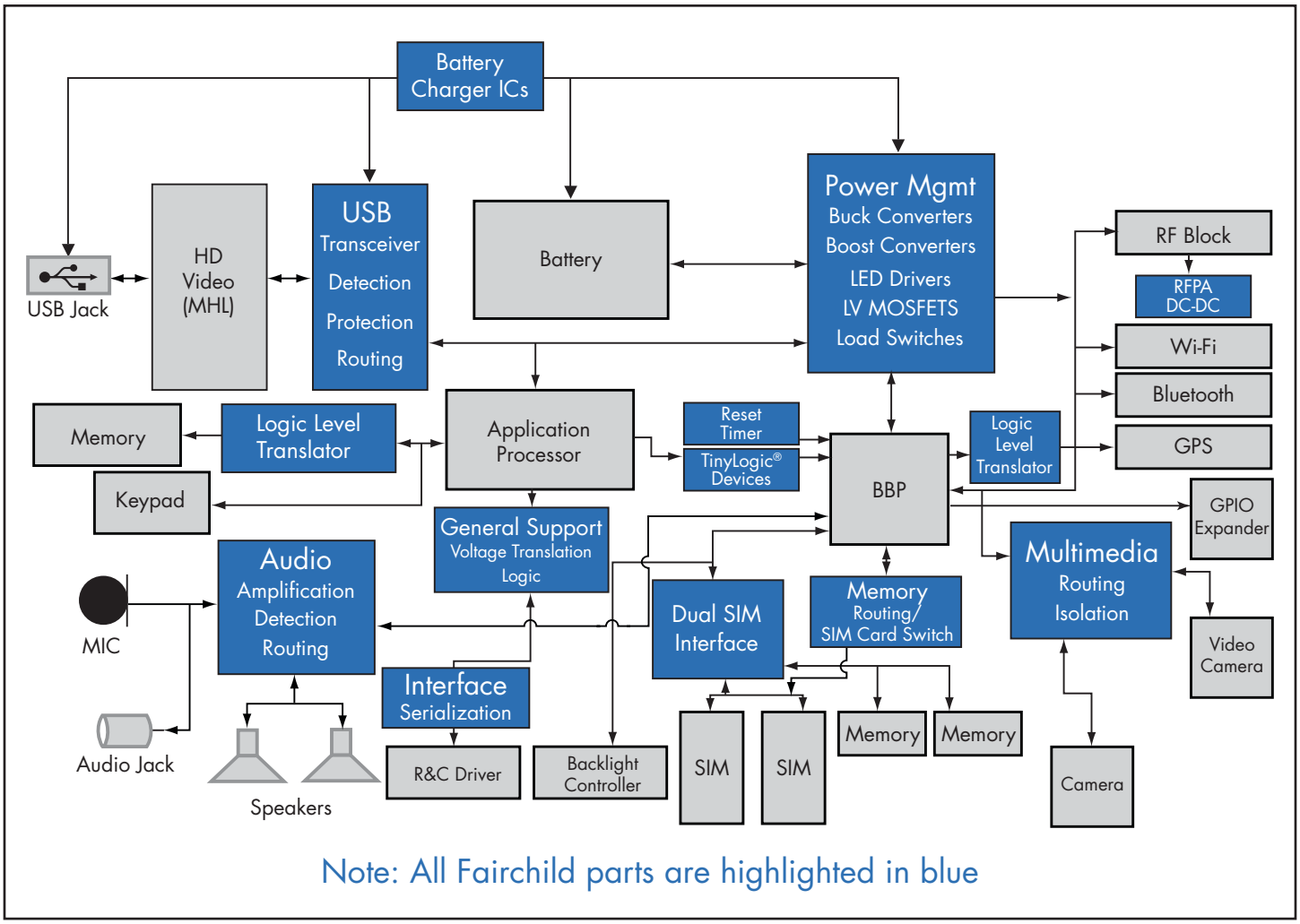

Note: All Fairchild parts are highlighted in blue

TABLE OF CONTENTS

POWER MANAGEMENT 6

CHARGE SWITCHES 6
CHARGE SWITCHES WITH INTEGRATED SCHOTTKY DIODES 6
POWER/LOAD SWITCHES 7
LEVEL SHIFTED INTEGRATED LOAD SWITCHES 8
DC-DC SWITCHES 9
BOOST SWITCHES 10
MISCELLANEOUS SWITCHES 10-11
ADVANCED LOAD SWITCHES, IntelliMAX™ 12-14
- IntelliMAX Selection Table 12
- Fixed-Current Limit 13
- User Adjustable Current Limit 14
- Slew Rate Controlled 14

INTEGRATED SWITCHING REGULATORS 15-16
- Synchronous and Asynchronous Boost Regulators 15
- Synchronous Buck Regulators 15
- DC-DC for RF Power Amplifiers 15
- LED Drivers 16

CHARGE PUMP CONVERTERS 17
CURRENT SENSE AMPLIFIERS 17
BATTERY CHARGERS 18

SIGNAL PATH ICs 19

SWITCHES 19-25
- USB Switches 19-20
- Multimedia Switches 20-21
- Audio Analog Switches 22
- Audio Jack Detection and Configuration Switches 23
- Mobile High-Definition Link (MHL) Switches 23
- General Analog Switches 23-24
- Signal Routing Switches 25

INTERFACE 26
- USB Transceivers 26
- µSerDes 26

SIGNAL CONDITIONING 27-29
- Operational Amplifiers 27
- Video Filter Drivers 27
- USB Over Voltage Protection (OVP) 28

LOGIC 29

VOLTAGE LEVEL TRANSLATORS *29*

RESET TIMERS *30*

TINYLOGIC® *30-31*

APPLICATION BLOCK DIAGRAMS 32

CELL PHONE *32*

DIGITAL STILL CAMERA *32*

MP3 PLAYER *33*

PDA *33*

PORTABLE GAMING DEVICE *34*

GPS *34*

PACKAGING TECHNOLOGIES 35

GLOBAL POWER RESOURCE℠ 36

APPLICATION NOTES 37

Please note: all Fairchild products in diagrams are illustrated in blue.

Charge Switches

Product Number	Polarity	BV_{DSS} Min. (V)	Config.	$R_{DS(ON)}$ Max. (Ω) @ V_{GS} =					Qg Typ. (nC) @V_{GS} = 5V	I_D (A)	P_D (W)	Package
				10V	4.5V	2.5V	1.8V	1.5V				
FDZ191P	P	-20	Single	–	0.085	0.123	–	0.2	9	3	1.5	1.0x1.5 WL-CSP
FDZ391P	P	-20	Single	–	0.085	0.123	–	0.2	9	3	1.5	1.0x1.5 WL-CSP Thin
FDZ193P	P	-20	Single	–	0.09	0.13	–	–	7	3	1.5	1.0x1.5 WL-CSP
FDZ197PZ	P	-20	Single	–	0.064	0.071	0.079	0.095	18	3.8	1.9	1.0x1.5 WL-CSP
FDZ371PZ	P	-20	Single	–	0.075	0.09	0.11	0.15	12	3.7	1.7	1.0x1.0 WL-CSP Thin
FDMA291P	P	-20	Single	–	0.042	0.058	0.0968	–	10	6.6	2.4	MicroFET™ 2x2
FDMA507PZ	P	-20	Single	–	0.025	0.035	0.045	–	30	7.8	2.4	MicroFET 2x2
FDMA510PZ	P	-20	Single	–	0.03	0.037	0.05	0.09	19	7.8	2.4	MicroFET 2x2
FDMA520PZ	P	-20	Single	–	0.03	0.053	–	–	14	7.3	2.4	MicroFET 2x2
FDMA530PZ	P	-30	Single	0.035	0.065	–	–	–	16	6.8	2.4	MicroFET 2x2
FDMA1023PZ	P	-20	Dual	–	0.072	0.095	0.13	0.195	8.6	3.7	1.5	MicroFET 2x2
FDMA1025P	P	-20	Dual	–	0.155	0.22	–	–	3.4	3.1	1.4	MicroFET 2x2
FDMA1027P	P	-20	Dual	–	0.12	0.16	0.24	–	4	2.2	1.4	MicroFET 2x2
FDMA1029PZ	P	-20	Dual	–	0.06	0.088	–	–	7	3.1	1.4	MicroFET 2x2
FDMA6023PZT	P	-20	Dual	–	0.06	0.08	0.11	0.17	12	3.6	1.4	MicroFET 2x2 Thin
FDMB668P	P	-20	Single	–	0.035	0.05	0.07	–	42	6.1	1.9	MicroFET 3x1.9
FDME510PZT	P	-20	Single	–	0.037	0.05	0.065	0.1	16	5	1.4	MicroFET 1.6x1.6 Thin
FDC6506P	P	-30	Dual	0.17	0.28	–	–	–	2.3	1.8	0.96	SSOT-6

Note: See specific device data sheet for full Qg test conditions

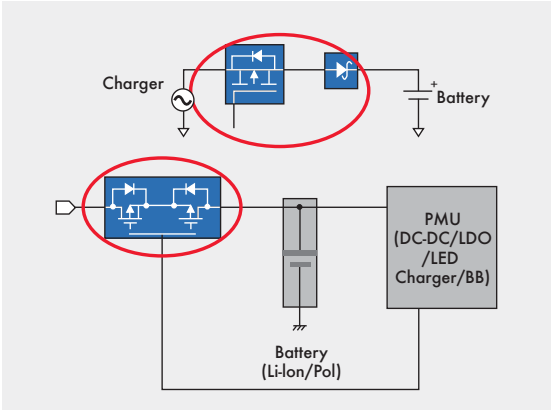

Charger Application: MOSFET used as a Current Source

Charge Switches with Integrated Schottky Diodes

Product Number	V_{DS} (V)	I_D (A)	$R_{DS(ON)}$ Max. (Ω) @ V_{GS} =					Qg		Schottky Diode		P_D (W)	Package
			10V	4.5V	2.5V	1.8V	1.5V	(nC)	@ V_{GS} (V)	V_F (V)	@ I_F (A)		
FDFMA2P029Z	-20	3.1	–	0.095	0.141	–	–	7	4.5	0.37	0.5	1.4	MicroFET 2x2
FDFMA2P857	-20	2.2	–	0.12	0.16	0.24	–	4	4.5	0.4	0.1	1.4	MicroFET 2x2
FDFMA2P853	-20	2.2	–	0.12	0.16	0.24	–	4	4.5	0.46	0.5	1.4	MicroFET 2x2
FDFMA2P853T	-20	3	–	0.12	0.16	0.24	–	4	4.5	0.46	0.5	1.4	MicroFET 2x2 Thin
FDFMA2P859T	-20	3	–	0.12	0.16	0.24	–	4	4.5	0.41	0.1	1.4	MicroFET 2x2 Thin
FDFME2P823ZT	-20	2.6	–	0.142	0.213	0.331	0.53	5.5	4.5	0.48	0.5	1.4	MicroFET 1.6x1.6 Thin

Power/Load Switches

Product Number	Polarity	BV_{DSS} Min. (V)	Config.	$R_{DS(ON)}$ Max. (Ω) @ V_{GS} =					Qg Typ. (nC) @V_{GS}=5V	I_D (A)	P_D (W)	Package
				10V	4.5V	2.5V	1.8V	1.5V				
FDZ191P	P	-20	Single	–	0.085	0.123	–	0.2	9	3	1.5	1.0x1.5 WL-CSP
FDZ193P	P	-20	Single	–	0.09	0.13	–	–	7	3	1.5	1.0x1.5 WL-CSP
FDZ391P	P	-20	Single	–	0.085	0.123	–	0.2	9	3	1.5	1.0x1.5 WL-CSP Thin
FDZ197PZ	P	-20	Single	–	0.064	0.071	0.079	0.095	18	3.8	1.9	1.0x1.5 WL-CSP
FDZ371PZ	P	-20	Single	–	0.075	0.09	0.11	0.15	12	3.7	1.7	1.0x1.0 WL-CSP Thin
FDMA291P	P	-20	Single	–	0.042	0.058	0.0968	–	10	6.6	2.4	MicroFET™ 2x2
FDMA410NZ	N	20	Single	–	0.023	0.029	0.036	0.05	10	9.5	2.4	MicroFET 2x2
FDMA420NZ	N	20	Single	–	0.03	0.04	–	–	8.8	5.7	2.4	MicroFET 2x2
FDMA430NZ	N	30	Single	–	0.04	0.05	–	–	7.3	5	2.4	MicroFET 2x2
FDMA507PZ	P	-20	Single	–	0.025	0.035	0.045	–	30	7.8	2.4	MicroFET 2x2
FDMA510PZ	P	-20	Single	–	0.03	0.037	0.05	0.09	19	7.8	2.4	MicroFET 2x2
FDMA520PZ	P	-20	Single	–	0.03	0.053	–	–	14	7.3	2.4	MicroFET 2x2
FDMA530PZ	P	-30	Single	0.035	0.065	–	–	–	16	6.8	2.4	MicroFET 2x2
FDMA1023PZ	P	-20	Dual	–	0.072	0.095	0.13	0.195	8.6	3.7	1.5	MicroFET 2x2
FDMA1024NZ	N	-20	Dual	–	0.054	0.066	0.082	0.114	5.2	5	1.4	MicroFET 2x2
FDMA1025P	P	-20	Dual	–	0.155	0.22	–	–	3.4	3.1	1.4	MicroFET 2x2
FDMA1027P	P	-20	Dual	–	0.12	0.16	0.24	–	4	2.2	1.4	MicroFET 2x2
FDMA1028NZ	N	20	Dual	–	0.037	0.05	–	–	4	3.7	1.4	MicroFET 2x2
FDMA1029PZ	P	-20	Dual	–	0.06	0.088	–	–	7	3.1	1.4	MicroFET 2x2
FDMA2002NZ	N	30	Dual	–	0.123	0.163	–	–	2.4	2.9	1.5	MicroFET 2x2
FDMA3028N	N	30	Dual	–	0.068	0.088	0.123	–	3.7	3.8	1.5	MicroFET 2x2
FDMA6023PZT	P	-20	Dual	–	0.06	0.08	0.11	0.17	12	3.6	1.4	MicroFET 2x2 Thin
FDMB3800N	N	30	Dual	0.04	0.051	–	–	–	4	4.8	1.6	MicroFET 3x1.9
FDMB668P	P	-20	Single	–	0.035	0.05	0.07	–	42	6.1	1.9	MicroFET 3x1.9
FDME410NZT	N	20	Single	–	0.026	0.031	0.039	0.053	9.2	7	1.4	MicroFET 1.6x1.6 Thin
FDME510PZT	P	-20	Single	–	0.037	0.05	0.065	0.1	16	5	1.4	MicroFET 1.6x1.6 Thin
FDME1023PZT	P	-20	Dual	–	0.142	0.213	0.331	0.53	5.5	2.6	1.4	MicroFET 1.6x1.6 Thin
FDME1024NZT	N	20	Dual	–	0.066	0.086	0.113	0.16	3	3.8	1.4	MicroFET 1.6x1.6 Thin
FDC655BN	N	30	Single	0.025	0.033	–	–	–	6	6.3	1.6	SSOT-6
FDC653N	N	30	Single	0.035	0.055	–	–	–	12	5	1.6	SSOT-6
FDC637AN	N	20	Single	–	0.024	0.032	–	–	10.5	6.2	1.6	SSOT-6
FDC633N	N	30	Single	–	0.042	0.054	–	–	11	5.2	1.6	SSOT-6
FDC658AP	P	-30	Single	0.05	0.075	–	–	–	6	4	1.6	SSOT-6
FDC654P	P	-30	Single	0.075	0.125	–	–	–	6.2	3.6	1.6	SSOT-6
FDC642P	P	-20	Single	–	0.065	0.1	–	–	7.2	4	1.6	SSOT-6
FDC640P	P	-20	Single	–	0.053	0.08	–	–	9	4.5	1.6	SSOT-6
FDC638P	P	-20	Single	–	0.048	0.065	–	–	10	4.5	1.6	SSOT-6
FDC638APZ	P	-20	Single	–	0.043	0.068	–	–	8	4.5	1.6	SSOT-6
FDC636P	P	-20	Single	–	0.13	0.18	–	–	6	2.8	1.6	SSOT-6
FDC634P	P	-20	Single	–	0.08	0.11	–	–	7.2	3.5	1.6	SSOT-6
FDC610PZ	P	-30	Single	0.042	0.075	–	–	–	9	4.9	1.6	SSOT-6
FDC608PZ	P	-20	Single	–	0.03	0.043	–	–	17	5.8	1.6	SSOT-6
FDC606P	P	-12	Single	–	0.026	0.035	0.053	–	18	6	1.6	SSOT-6
FDC604P	P	-20	Single	–	0.033	0.043	0.06	–	19	5.5	1.6	SSOT-6
FDC602P	P	-20	Single	–	0.035	0.05	–	–	14	5.5	1.6	SSOT-6

Note: See specific device data sheet for full $Q_{G(TOT)}$ test conditions

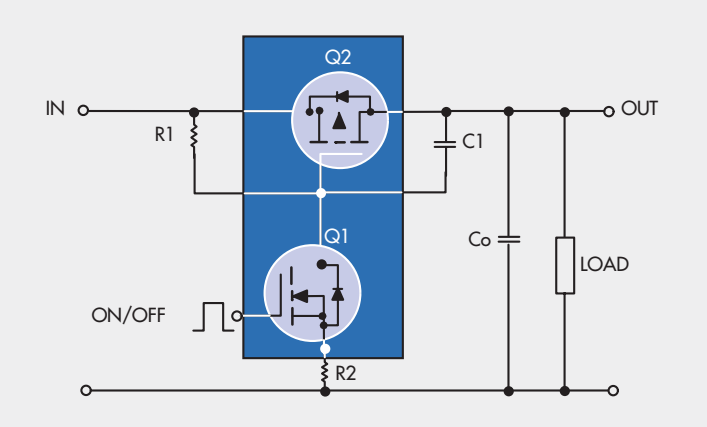

Integrated Load Switch

Level Shifted Integrated Load Switches

Product Number	V_{IN} Max. (V)	V_{GS} Max. (V)	$R_{DS(ON)}$ Max. (Ω) @ V_{GS} =						Package
			12V	4.5V	3.3V	2.5V	1.8V	1.5V	
FDG6323L	8	8	–	0.55	–	0.75	–	–	SC70
FDG6331L	8	8	–	0.26	–	0.33	0.45	–	SC70
FDG6342L	8	8	–	0.15	–	0.195	0.28	0.48	SC70
FDG6324L	20	8	0.55	0.75	–	–	–	–	SC70
FDC6323L	8	8	–	0.2	0.3	–	–	–	SSOT-6
FDC6325L	8	8	–	0.13	–	0.18	–	–	SSOT-6
FDC6329L	8	8	–	0.07	–	0.105	–	–	SSOT-6
FDC6331L	8	8	–	0.055	–	0.07	0.1	–	SSOT-6
FDC6324L	20	20	0.2	0.3	–	–	–	–	SSOT-6
FDC6326L	20	20	0.125	0.2	–	–	–	–	SSOT-6
FDC6330L	20	20	0.08	0.125	–	–	–	–	SSOT-6
FDY6342L	8	8	–	0.5	–	0.7	1.2	1.8	SC-89

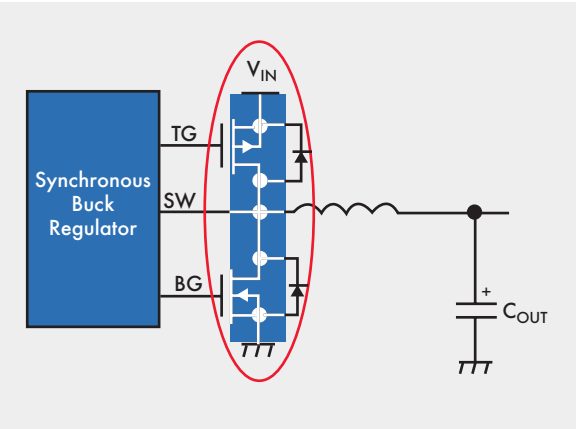

DC-DC Switcher Application

DC-DC Switches

Product Number	Polarity	BV_{DSS} Min. (V)	Configuration	$R_{DS(ON)}$ Max. (Ω) @ V_{GS} =				Qg Typ. (nC) @V_{GS}=5V	I_D (A)	P_D (W)	Package
				10V	4.5V	2.5V	1.8V				
FDMA1032CZ	N|P	20|-20	Complementary	–	0.037|.06	0.05|.088	–	4|7	3.7	1.4	MicroFET™ 2x2
FDME1034CZT	N|P	20|-20	Complementary	–	.066|.142	.086|.213	.113|.331	3|5.5	3.8	1.4	MicroFET 1.6x1.6 Thin
FDG6320C	N|P	25|-25	Complementary	–	4|10	5@2.7|1 3@2.7	–	0.29|.22	0.22|.14	0.3	SC70-6
FDG6321C	N|P	25|-25	Complementary	–	0.45|1.1	0.6@2.7|1 0.5@2.7	–	1.64|1.1	0.5|.41	0.3	SC70-6
FDG6322C	N|P	25|-25	Complementary	–	4|1.1	5@2.7|1 0.5@2.7	–	0.29|1.1	0.22|.41	0.3	SC70-6
FDG6332C	N|P	20|-20	Complementary	–	0.3|.42	0.4|.63	–	1.1|1.4	0.7|.6	0.3	SC70-6
FDY4000CZ	N|P	20|-20	Complementary	–	0.7|1.2	0.85|1.6	1.25|2.7	0.8|1	0.6|.35	625	SC-89
FDC6320C	N|P	25|-25	Complementary	–	4|10	5@2.7|1 3@2.7	–	0.29|.23	0.22|.12	0.9	SSOT-6
FDC6321C	N|P	25|-25	Complementary	–	0.45|1.1	—	–	1.64|1.1	0.68|.46	0.9	SSOT-6
FDC6322C	N|P	25|-25	Complementary	–	4|1.1	5@2.7|1 0.5@2.7	–	0.49|1	0.22|.46	0.9	SSOT-6
FDC6327C	N|P	20|-20	Complementary	–	0.08|.17	0.12|.25	–	3.25|2.85	2.7|1.9	0.96	SSOT-6
FDC6420C	N|P	20|-20	Complementary	–	0.07|.125	0.095|.19	–	3.3|3.7	3|2.2	0.96	SSOT-6

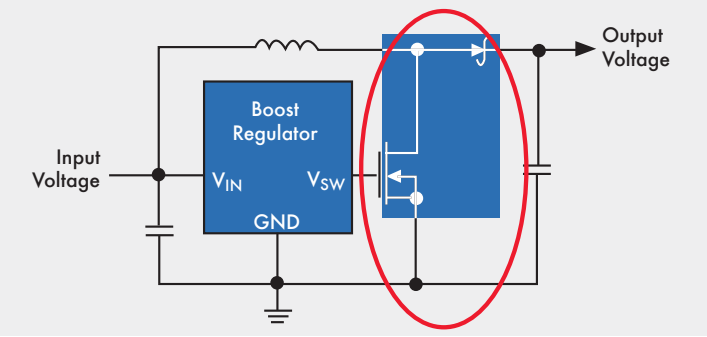

Typical Boost Application

Boost Switches

Product Number	V_{DS} (V)	I_D (A)	$R_{DS(ON)}$ Max. (Ω) @ V_{GS} =			Qg		Schottky Diode		P_D (W)	Package
			10V	4.5V	2.5V	(nC)	@ V_{GS} (V)	V_F (V)	@ I_F (A)		
FDFMA2N028Z	20	3.7	–	0.068	0.086	4	4.5	0.37	1	1.4	MicroFET™ 2x2
FDFMA3N109	30	2.9	–	0.123	0.163	2.4	4.5	0.5	1	1.5	MicroFET 2x2
FDFME3N311ZT	30	1.6	–	0.299	0.41	1	4.5	0.47	1	1.1	MicroFET 1.6x1.6 Thin
FDZ3N513ZT	30	1.1	–	0.462	–	1	4.5	1.2	0.3	1	1.0x1.0 WL-CSP Thin

Miscellaneous Switches

Product Number	Polarity	BV_{DSS} Min. (V)	Config.	$R_{DS(ON)}$ Max. (Ω) @ V_{GS} =					Qg Typ. (nC) @V_{GS} =5V	I_D (A)	P_D (W)	Package
				10V	4.5V	2.5V	1.8V	1.5V				
FDG1024NZ	N	20	Dual	–	0.175	0.215	0.27	0.389	1.8	1.2	0.36	SC70-6
FDG8850NZ	N	30	Dual	–	0.4	0.5@2.7	–	–	1.03	0.75	0.36	SC70-6
FDG6335N	N	20	Dual	–	0.3	0.4	–	–	1.1	0.7	0.3	SC70-6
FDG6317NZ	N	20	Dual	–	0.4	0.55	–	–	0.76	0.7	0.3	SC70-6
FDG6313N	N	25	Dual	–	0.45	0.6@2.7	–	–	1.64	0.5	0.3	SC70-6
FDG6303N	N	25	Dual	–	0.45	0.6@2.7	–	–	1.64	0.5	0.3	SC70-6
FDG6301N	N	25	Dual	–	4	5@2.7	–	–	0.29	0.22	0.3	SC70-6
FDG6318PZ	P	-20	Dual	–	0.78	1.2	–	–	1.08	0.5	0.3	SC70-6
FDG6318P	P	-20	Dual	–	0.78	1.2	–	–	0.86	0.5	0.3	SC70-6
FDG6316P	P	-12	Dual	–	0.27	0.36	0.65	–	1.7	0.7	0.3	SC70-6
FDG6308P	P	-20	Dual	–	0.4	0.55	0.8	–	1.8	0.6	0.3	SC70-6
FDG6306P	P	-20	Dual	–	0.42	0.63	–	–	1.4	0.6	0.3	SC70-6
FDG6304P	P	-25	Dual	–	1.1	1.5@2.7	–	–	1.1	0.41	0.3	SC70-6
FDG6302P	P	-25	Dual	–	10	13@2.7	–	–	0.22	0.14	0.3	SC70-6
FDG410NZ	N	20	Single	–	0.07	0.077	0.087	0.115	5.1	2.2	0.42	SC70-6
FDG315N	N	30	Single	0.12	0.16	–	–	–	2.1	2	0.75	SC70-6
FDG313N	N	25	Single	–	0.45	0.6@2.7	–	–	1.64	0.95	0.75	SC70-6
FDG311N	N	20	Single	–	0.115	0.15	–	–	3	1.9	0.75	SC70-6
FDG329N	N	20	Single	–	0.09	0.115	–	–	3.3	1.5	0.42	SC70-6
FDG327NZ	N	20	Single	–	0.09	0.1	0.14	–	4.2	1.5	0.42	SC70-6
FDG327N	N	20	Single	–	0.09	0.1	0.14	–	4.5	1.5	0.42	SC70-6
FDG332PZ	P	-20	Single	–	0.095	0.115	0.16	0.33	7.6	2.6	0.75	SC70-6
FDG330P	P	-12	Single	–	0.11	0.15	0.215	–	5	2	0.75	SC70-6
FDG328P	P	-20	Single	–	0.145	0.21	–	–	3.7	1.5	0.75	SC70-6
FDG326P	P	-20	Single	–	0.14	0.18	0.25	–	4.4	1.5	0.75	SC70-6
FDG316P	P	-30	Single	0.19	0.3	–	–	–	3.5	1.6	0.75	SC70-6
FDG314P	P	-25	Single	–	1.1	1.5@2.7	–	–	1.1	0.65	0.75	SC70-6

Note: See specific device data sheet for full $Q_{G(TOT)}$ test conditions

Miscellaneous Switches (Continued)

Product Number	Polarity	BV_{DSS} Min. (V)	Config.	$R_{DS(ON)}$ Max. (Ω) @ V_{GS} =					Qg Typ. (nC) @V_{GS}=5V	I_D (A)	P_D (W)	Package
				10V	4.5V	2.5V	1.8V	1.5V				
FDG312P	P	-20	Single	–	0.18	0.25	–	–	3.3	1.2	0.75	SC70-6
FDY3001NZ	N	20	Dual	–	5	7	9	–	0.8	0.2	0.63	SC-89
FDY3000NZ	N	20	Dual	–	0.7	0.85	1.25	–	0.8	0.6	0.63	SC-89
FDY2001PZ	P	-20	Dual	–	8	12	15	–	1	0.15	0.63	SC-89
FDY2000PZ	P	-20	Dual	–	1.2	1.6	2.7	–	1	0.35	0.63	SC-89
FDY301NZ	N	20	Single	–	5	7	9	–	0.8	0.2	0.63	SC-89
FDY300NZ	N	20	Single	–	0.7	0.85	1.25	–	0.8	0.6	0.63	SC-89
FDY101PZ	P	-20	Single	–	8	12	15	–	1	0.15	0.63	SC-89
FDY100PZ	P	-20	Single	–	1.2	1.6	2.7	–	1	0.35	0.63	SC-89
FDY102PZ	P	-20	Single	–	0.5	0.7	1.2	1.8	2.2	0.83	0.63	SC-89
FDY1002PZ	P	-20	Dual	–	0.5	0.7	1.2	1.8	2.2	0.83	0.63	SC-89
FDV305N	N	20	Single	–	0.22	0.3	–	–	1.1	0.9	0.35	SOT-23
FDV303N	N	25	Single	–	0.45	0.6@2.7	–	–	1.64	0.68	0.35	SOT-23
FDV301N	N	25	Single	–	4	5@2.7	–	–	0.49	0.22	0.35	SOT-23
FDV304P	P	-25	Single	–	1.1	1.5@2.7	–	–	1.1	0.46	0.35	SOT-23
FDV302P	P	-25	Single	–	10	13@2.7	–	–	0.22	0.12	0.35	SOT-23
FDC6401N	N	20	Dual	–	0.07	0.095	–	–	3.3	3	0.96	SSOT-6
FDC6561AN	N	30	Dual	0.095	0.145	–	–	–	2.1	2.5	0.9	SSOT-6
FDC6305N	N	20	Dual	–	0.08	0.12	–	–	3.5	2.7	0.9	SSOT-6
FDC6303N	N	25	Dual	–	0.45	0.6@2.7	–	–	1.64	0.68	0.9	SSOT-6
FDC6301N	N	25	Dual	–	4	5@2.7	–	–	0.49	0.22	0.9	SSOT-6
FDC6506P	P	-30	Dual	0.17	0.28	–	–	–	2.3	1.8	0.96	SSOT-6
FDC6318P	P	-12	Dual	–	0.09	0.125	0.2	–	5.4	2.5	0.96	SSOT-6
FDC6312P	P	-20	Dual	–	0.115	0.155	0.225	–	4.4	2.3	0.96	SSOT-6
FDC6310P	P	-20	Dual	–	0.125	0.19	–	–	3.7	2.2	0.96	SSOT-6
FDC6306P	P	-20	Dual	–	0.17	0.25	–	–	3	1.9	0.96	SSOT-6
FDC6304P	P	-25	Dual	–	1.1	1.5@2.7	–	–	1.1	0.46	0.9	SSOT-6
FDC6302P	P	-25	Dual	–	10	13@2.7	–	–	0.22	0.12	0.9	SSOT-6
FDN361BN	N	30	Single	0.11	0.16	–	–	–	1.3	1.4	0.5	SSOT-3
FDN359BN	N	30	Single	0.046	0.06	–	–	–	5	2.7	0.5	SSOT-3
FDN357N	N	30	Single	0.06	0.09	–	–	–	4.2	1.9	0.5	SSOT-3
FDN339AN	N	20	Single	–	0.035	0.05	–	–	7	3	0.5	SSOT-3
FDN337N	N	30	Single	–	0.065	0.082	–	–	7	2.2	0.5	SSOT-3
FDN335N	N	20	Single	–	0.07	0.1	–	–	3.5	1.7	0.5	SSOT-3
FDN327N	N	20	Single	–	0.07	0.08	0.12	–	4.5	2	0.5	SSOT-3
FDN360P	P	-30	Single	0.08	0.125	–	–	–	6.2	2	0.5	SSOT-3
FDN358P	P	-30	Single	0.125	0.2	–	–	–	4	1.5	0.5	SSOT-3
FDN352AP	P	-30	Single	0.18	0.3	–	–	–	1.4	1.3	0.5	SSOT-3
FDN342P	P	-20	Single	–	0.08	0.13	–	–	6.3	2	0.5	SSOT-3
FDN340P	P	-20	Single	–	0.07	0.11	–	–	7.2	2	0.5	SSOT-3
FDN338P	P	-20	Single	–	0.115	0.155	–	–	4.4	1.6	0.5	SSOT-3
FDN336P	P	-20	Single	–	0.2	0.27	–	–	3.6	1.2	0.5	SSOT-3
FDN308P	P	-20	Single	–	0.125	0.19	–	–	3.8	1.5	0.5	SSOT-3
FDN306P	P	-12	Single	–	0.04	0.05	0.08	–	12	2.6	0.5	SSOT-3
FDN304PZ	P	-20	Single	–	0.052	0.07	0.1	–	12	2.4	0.5	SSOT-3
FDN304P	P	-20	Single	–	0.052	0.07	0.1	–	12	2.4	0.5	SSOT-3
FDN302P	P	-20	Single	–	0.055	0.08	–	–	9	2.4	0.5	SSOT-3

Note: See specific device data sheet for full $Q_{G(TOT)}$ test conditions

Fairchild's IntelliMAX family of integrated load switches supports the latest generations of mobile and consumer electronic devices. The IntelliMAX family combines conventional MOSFET performance with a unique combination of protection, control and fault monitoring features to enhance power management design. This level of integration helps designers achieve efficiency and reliability, while minimizing board space requirements.

IntelliMAX

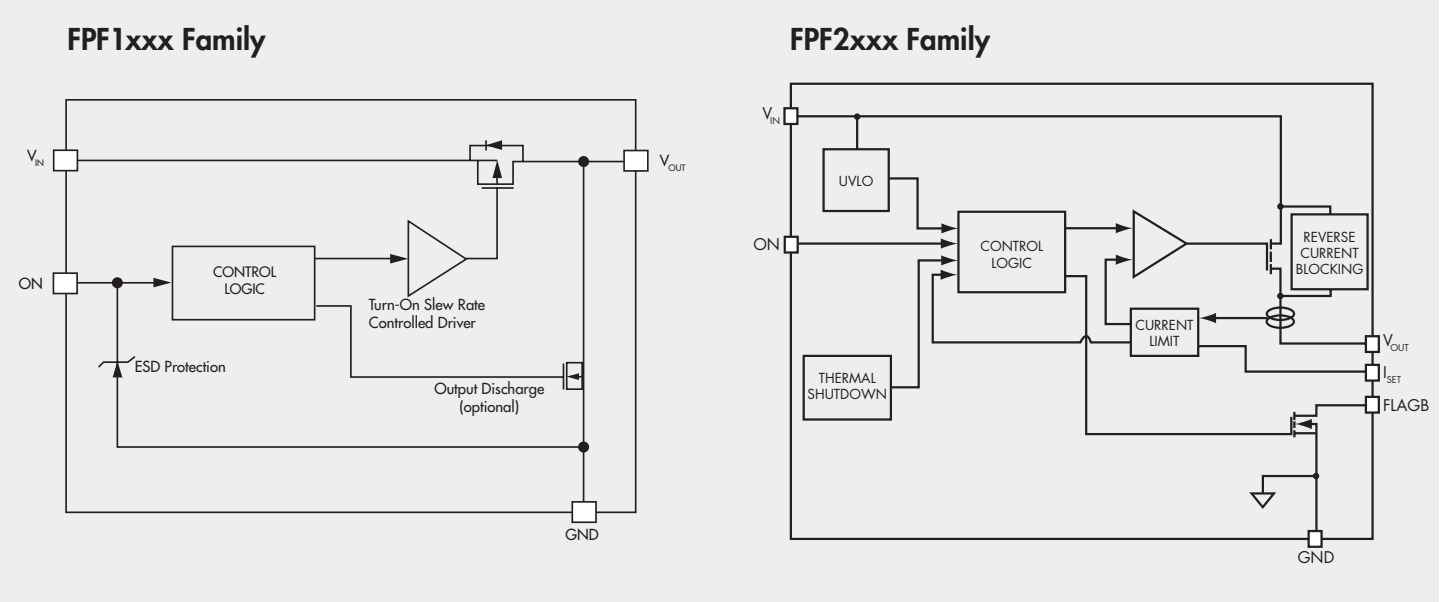

Representative Block Diagrams. Please Refer to the Data Sheets for Specific Features and I/O Information.

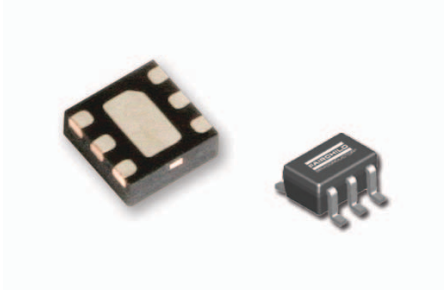

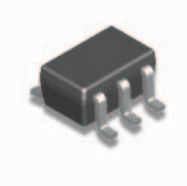

IntelliMAX Selection Table

Product Number	V_{IN}	$R_{DS(ON)}$ (Typ)	Slew Rate (Typ)	IQ (Typ)	Continous SW Current (Max)	Output Discharge	ON Action	Rth_{JA}	ESD (HBM/CDM)	P_D	Package
FPF1203	1.2V-5,5V	55mΩ	100µs	1.5µA max	1.5A	N/A	H	110'C/W	7kV/2kV	1W	CSP 0.76x0.76
FPF1204	1.2V-5,5V	55mΩ	100µs	1.5µA max	1.5A	65Ω	H	110'C/W	7kV/2kV	1W	CSP 0.76x0.76

Fixed – Current Limit

			Feature Set													
Product Number	Config.	R_{on} Typ. (mΩ)	Min. (V)	Max. (V)	SR Time (µS)	Current Limit		Current Blanking	Fault Behavior			Reverse Current Blocking	P_{GOOD}	Output Discharge	On-Pin Behavior	Package
						Min. (mA)	Max. (mA)		Auto Restart	TSD	Constant Current					
FPF2000	Single	700	1.8	5.5	10	50	–	•	•	–	–	–	–	–	Hi	SC-70
FPF2001	Single	700	1.8	5.5	10	50	–	•	•	–	–	–	–	–	Lo	SC-70
FPF2002	Single	700	1.8	5.5	10	50	–	•	–	•	–	–	–	–	Hi	SC-70
FPF2003	Single	700	1.8	5.5	–	50	–	–	–	–	•	–	–	–	Hi	SC-70
FPF2004	Single	700	1.8	5.5	10	100	–	•	•	–	–	–	–	–	Hi	SC-70
FPF2005	Single	700	1.8	5.5	10	100	–	•	•	–	–	–	–	–	Lo	SC-70
FPF2006	Single	700	1.8	5.5	10	100	–	•	–	•	–	–	–	–	Hi	SC-70
FPF2007	Single	700	1.8	5.5	–	100	–	–	–	–	•	–	–	–	Hi	SC-70
FPF2100	Single	125	1.8	5.5	12	200	–	•	•	–	–	–	–	–	Hi	SOT-23
FPF2101	Single	125	1.8	5.5	12	200	–	•	•	–	–	–	–	–	Lo	SOT-23
FPF2102	Single	125	1.8	5.5	12	200	–	•	–	•	•	–	–	–	Hi	SOT-23
FPF2103	Single	125	1.8	5.5	–	200	–	–	–	–	–	–	–	–	Hi	SOT-23
FPF2104	Single	125	1.8	5.5	12	400	–	•	•	–	–	–	–	–	Hi	SOT-23
FPF2105	Single	125	1.8	5.5	12	400	–	•	•	–	–	–	–	–	Lo	SOT-23
FPF2106	Single	125	1.8	5.5	12	400	–	•	–	•	•	–	–	–	Hi	SOT-23
FPF2107	Single	125	1.8	5.5	–	400	–	–	–	–	–	–	–	–	Hi	SOT-23
FPF2108	Single	125	1.8	5.5	12	400	–	•	–	•	•	•	–	–	Lo	SOT-23
FPF2109	Single	125	1.8	5.5	–	200	–	–	–	–	–	•	–	–	Hi	SOT-23
FPF2110	Single	125	1.8	5.5	–	400	–	–	–	–	–	•	–	–	Hi	SOT-23
FPF2116	Single	125	1.8	5.5	12	200	–	•	•	–	–	•	–	–	Hi	SOT-23
FPF2140	Single	110	1.8	5.5	10	200	–	•	•	–	–	•	•	–	Hi	MLP 2x2
FPF2142	Single	110	1.8	5.5	–	200	–	•	–	•	–	•	•	–	Hi	MLP 2x2
FPF2143	Single	110	1.8	5.5	–	200	–	–	–	–	•	•	•	–	Hi	MLP 2x2
FPF2144	Single	110	1.8	5.5	10	400	–	•	•	–	–	•	•	–	Hi	MLP 2x2
FPF2146	Single	110	1.8	5.5	–	400	–	•	–	•	–	•	•	•	Hi	MLP 2x2
FPF2147	Single	110	1.8	5.5	–	400	–	–	–	–	•	•	•	–	Hi	MLP 2x2
FPF2148	Single	110	1.8	5.5	–	200	–	–	–	–	•	•	•	–	Lo	MLP 2x2
FPF2200	Single	140	1.8	5.5	40	500	–	•	•	–	–	•	–	•	Hi	MLP 2x2
FPF2201	Single	140	1.8	5.5	40	500	–	•	–	•	–	•	–	•	Hi	MLP 2x2
FPF2202	Single	140	1.8	5.5	40	500	–	–	–	–	•	•	–	•	Hi	MLP 2x2
FPF2024	Single	210	1.6	5.5	30	100	–	•	•	–	–	–	–	–	Hi	WL-CSP 1x1.5
FPF2025	Single	210	1.6	5.5	30	100	–	•	•	–	–	–	–	–	Lo	WL-CSP 1x1.5
FPF2026	Single	210	1.6	5.5	30	100	–	•	–	•	–	–	–	–	Hi	WL-CSP 1x1.5
FPF2027	Single	210	1.6	5.5	30	100	–	–	–	–	•	–	–	–	Hi	WL-CSP 1x1.5
FPF2172	Single	125	1.8	5.5	13	200	–	•	–	•	–	•	–	–	Hi	MLP 3x3 6L
FPF2174	Single	125	1.8	5.5	14	200	–	•	–	•	–	•	–	–	Hi	MLP 3x3 6L
FPF2300MX	Dual	75	1.8	5.5	–	1100	–	•	•	–	–	•	–	–	Hi	SO8 - 8L
FPF2302MX	Dual	75	1.8	5.5	–	1100	–	•	–	•	–	•	–	•	Hi	SO8 - 8L
FPF2303MX	Dual	75	1.8	5.5	–	1100	–	–	–	–	•	•	–	•	Hi	SO8 - 8L
FPF2300MPX	Dual	75	1.8	5.5	–	1100	–	•	•	–	–	•	–	•	Hi	MLP 3x3 8L
FPF2302MPX	Dual	75	1.8	5.5	–	1100	–	•	–	•	–	•	–	•	Hi	MLP 3x3 8L
FPF2303MPX	Dual	75	1.8	5.5	–	1100	–	–	–	–	•	•	–	•	Hi	MLP 3x3 8L
FPF2310MPX	Dual	75	1.8	5.5	–	450	–	•	•	–	–	•	–	•	Hi	MLP 3x3 8L
FPF2312MPX	Dual	75	1.8	5.5	–	450	–	•	–	•	–	•	–	•	Hi	MLP 3x3 8L
FPF2313MPX	Dual	75	1.8	5.5	–	450	–	–	–	–	•	•	–	•	Hi	MLP 3x3 8L
FPF2313LMPX	Dual	75	1.8	5.5	–	450	–	–	–	–	•	•	–	•	Lo	MLP 3x3 8L

Additional Features: SR, Under Voltage Lockout, Thermal Shutdown, Fault Flag and Over Current Protection

User Adjustable Current Limit

Product Number	Config.	Feature Set											Output Discharge	On-Pin Behavior	Package
		R_{ON} Typ. (mΩ)	Min. (V)	Max. (V)	SR Time (µS)	Current Limit		Current Blanking	Fault Behavior			Reverse Current Blocking			
						Min. (mA)	Max. (mA)		Auto Restart	Shut-down	Constant Current				
FPF2123	Single	125	1.8	5.5	–	150	1500	•	•	–	–	•	–	Hi	SOT-23 5L
FPF2124	Single	125	1.8	5.5	–	150	1500	•	–	•	–	•	–	Hi	SOT-23 5L
FPF2125	Single	125	1.8	5.5	–	150	1500	•	–	–	–	•	–	Hi	SOT-23 5L
FPF2163	Single	120	1.8	5.5	–	150	1500	•	•	–	–	•	–	Hi	MLP 2x2 6L
FPF2164	Single	120	1.8	5.5	–	150	1500	•	–	•	–	•	–	Hi	MLP 2x2 6L
FPF2165	Single	120	1.8	5.5	–	150	1500	–	–	–	•	•	–	Hi	MLP 2x2 6L
FPF2193	Single	75	1.8	5.5	–	150	1500	•	•	–	–	•	–	Hi	WL-CSP 1x1.5
FPF2194	Single	75	1.8	5.5	–	150	1500	•	–	•	–	•	–	Hi	WL-CSP 1x1.5
FPF2195	Single	75	1.8	5.5	–	150	1500	–	–	–	•	•	–	Hi	WL-CSP 1x1.5
FPF2213	Single	250	1.8	5.5	40	100	250	•	•	–	–	•	•	Hi	MLP 2x2 6L
FPF2214	Single	250	1.8	5.5	40	100	250	•	–	•	–	•	•	Hi	MLP 2x2 6L
FPF2215	Single	250	1.8	5.5	40	100	250	–	–	–	•	•	•	Hi	MLP 2x2 6L
FPF2223	Single	140	1.8	5.5	40	250	650	•	•	–	–	•	•	Hi	MLP 2x2 6L
FPF2224	Single	140	1.8	5.5	40	250	650	•	–	•	–	•	•	Hi	MLP 2x2 6L
FPF2225	Single	140	1.8	5.5	40	250	650	–	–	–	•	•	•	Hi	MLP 2x2 6L

Additional Features: SR, Under Voltage Lockout, Thermal Shutdown, Fault Flag and Over Current Protection

Slew Rate Controlled

Product Number	Configuration	Feature Set						Output Discharge	On-Pin Behavior	Package
		R_{ON} Typ.(mΩ)	Min.(V)	Max(V)	SR	SR Time (µS)	Reverse Current Blocking			
FPF1003A	Single	20	1.2	5.5	•	10	–	–	Hi	WL-CSP 1x1.5
FPF1004	Single	20	1.2	5.5	•	10	–	•	Hi	WL-CSP 1x1.5
FPF1005	Single	50	1.2	5.5	•	10	–	–	Hi	MLP 2x2 6L
FPF1006	Single	50	1.2	5.5	•	10	–	•	Hi	MLP 2x2 6L
FPF1007	Single	30	1.2	5.5	•	10	–	•	Hi	MLP 2x2 6L
FPF1008	Single	30	1.2	5.5	•	80	–	•	Hi	MLP 2x2 6L
FPF1009	Single	30	1.2	5.5	•	1000	–	•	Hi	MLP 2x2 6L
FPF1013	Single	17	0.8	2.5	•	30	•	–	Hi	WL-CSP 1x1.5
FPF1014	Single	17	0.8	2.5	•	30	•	•	Hi	WL-CSP 1x1.5
FPF1015	Single	35	0.8	2.5	•	30	•	–	Hi	Thin 2x2 MLP
FPF1016	Single	35	0.8	2.5	•	30	•	•	Hi	Thin 2x2 MLP
FPF1017	Single	35	0.8	2.5	•	150	•	–	Hi	Thin 2x2 MLPL
FPF1018	Single	35	0.8	2.5	•	150	•	•	Hi	Thin 2x2 MLP
FPF1038	Single	20	1.2	5.5	•	2700	–	–	Hi	WL-CSP 1x1.5
FPF1039	Single	20	1.2	5.5	•	2700	–	–	Hi	WL-CSP 1x1.5
FPF1103	Single	55	1.2	4	•	65	–	–	Hi	WL-CSP 1x1
FPF1104	Single	55	1.2	4	•	65	–	•	Hi	WL-CSP 1x1
FPF1107	Single	55	1.2	4	•	130	–	–	Hi	WL-CSP 1x1
FPF1108	Single	55	1.2	4	•	130	–	•	Hi	WL-CSP 1x1
FPF1207	Single	50	1.2	4	•	110	–	–	Hi	WL-CSP 0.76x0.76
FPF1208	Single	50	1.2	4	•	110	–	•	Hi	WL-CSP 0.76x0.76

Synchronous and Asynchronous Boost Regulators

Product Number	Type	V_{IN} (V)	V_{OUT} (V)	Output Current (mA)	Switching Frequency (MHz)	Max. Efficiency (%)	Package
FAN4860	Sync	2.3-4.5	5V, Fixed	250	3	92	WL-CSP 6 Bump, UMLP 2x2
FAN4855	Sync	1.6-4.5	3-5, Adj	500	0.43	95	MSOP-8
FAN5331	Async	2.7-5.5	<20, Adj	50	1.6	88	SOT-23
FAN5333A	Async	2.7-5.5	<30, Adj	75	1.6	88	SOT-23
FAN5333B	Async	1.8-5.5	<30, Adj	75	1.6	80	SOT-23
FAN5330	Async	1.8-5.5	<30, Adj	32	1.6	80	SOT-23
FAN5336	Async	2.7-5.5	<33, Adj	125	1.5	80	MLP 3x3 6L

Synchronous Buck Regulators

Product Number	V_{IN} (V)	V_{OUT} (V)	Output Current (mA)	Output Type	Switching Frequency (MHz)	Max. Efficiency (%)	Package
FAN5350	2.7-5.5	1.82	600	Fixed	3	94	WL-CSP 1x1.37 5 Bump, 3x3 MLP
FAN5352*	2.7-5.5	0.8-0.9 VIN	2200	Adj	3	95	MLP 3x2
FAN53540*	2.7-5.5	0.8-0.9 VIN	5000	Adj	2.4	95	WL-CSP 1.56x1.96
FAN5355	2.7-5.5	0.75-1.975	800 / 1000	Adj	3	94	WL-CSP 1.46x2.23 12 Bump, 3x3 MLP
FAN5365	2.3-5.5	0.75-1.975	800 / 1000	Adj	–	–	–
FAN2001	2.5-5.5	0.8-V_{IN}	1000	Adj	1.3	95	MLP 3x3
FAN2002	2.5-5.5	0.8-V_{IN}	1000	Adj	1.3	95	MLP 3x3
FAN5361	2.3-5.5	1.0-1.82	600	Fixed	6	92	WL-CSP 0.99x1.39 6 Bump
FAN4602	2.3-5.5	1.0-1.82	600	Fixed	6	92	MLP 4x2.5
FAN4603	2.3-5.5	1.0-1.82	600	Fixed	6	92	MLP 4x2.5
FAN5353	2.7-5.5	0.8 - 3.3	3000	Adj	3	93	MLP 3x3.5
FAN5354	2.7-5.5	0.8 - 3.3	3000	Adj	3	93	MLP 3x3.5

*In Development

DC-DC for RF Power Amplifier

Product Number	V_{IN} (V)	V_{OUT} (V)	Features	Frequency (MHz)	Output Current (mA)	Applications	Package
FAN5902	2.7-5.5	0.4-3.4	PFM, PWM, Bypass, FET, Dynamic Output	6	800	WCDMA, CDMA, Linear PAs	WL-CSP, MLP

LED Drivers

Product Number	Configuration	Number of LEDs	Input Voltage (V)	LED Current (mA)	Boost	Brightness Control	Efficiency	Package
FAN5606	Serial	6	2.7-5	20	Inductor, Built-in Schottky	Analog, PWM, Digital	85%	MLP 3x3
FAN5607	Parallel	4	2.7-5.5	30	Adaptive Charge Pump	Analog, PWM	92%	MLP 4x4
FAN5608	Serial	2*6	2.7-5	20	Inductor, Built-in Schottky	Analog, PWM, Digital	85%	MLP 3x3, 4x4
FAN5609	Parallel	1	2.7-5.5	20	Adaptive Charge Pump	PWM, Digital	86%	MLP 4x4
FAN5610	Parallel	1	2.7-5.5	21	No Boost	PWM, Digital	91%	MLP 3x3
FAN5611	Parallel	1	3.3-5.5	40	No Boost	Analog, PWM	90%	SC70
FAN5612	Parallel	1	3.3-5.5	40	No Boost	Analog, PWM	90%	SC70
FAN5613	Parallel	1	3.3-5.5	40	No Boost	Analog, PWM	90%	MLP
FAN5614	Parallel	1	3.3-5.5	80	No Boost	Analog, PWM	90%	SC70
FAN5616	Parallel	3	2.5-5.5	40	Adaptive Charge Pump	Analog, PWM, Digital	90%	MLP 3x3
FAN5617	Parallel	4	2.7-5.5	30	Adaptive Charge Pump	Analog, PWM, Digital	90%	MLP 3x3
FAN5645	NA	1	2.7-5.5	20	High Side CC Driver	Analog	–	MLP 3x3
FAN5646	NA	1	2.7-5.5	3-20	High Side CC Fader Driver	Analog	–	WL-CSP 0.85x0.85mm Bump, 5-lead SC-70
FAN5701UC08X	Parallel	6	2.7-5.5	8	Charge Pump	PWM	92%	WL-CSP 16 Bumps
FAN5701UC15X	Parallel	6	2.7-5.5	15	Charge Pump	PWM	92%	WL-CSP 16 Bumps
FAN5701UC20X	Parallel	6	2.7-5.5	20	Charge Pump	PWM	92%	WL-CSP 16 Bumps
FAN5701UC30X	Parallel	6	2.7-5.5	30	Charge Pump	PWM	92%	WL-CSP 16 Bumps
FAN5701UMP08X	Parallel	6	2.7-5.5	8	Charge Pump	PWM	92%	UMLP-16
FAN5701UMP15X	Parallel	6	2.7-5.5	15	Charge Pump	PWM	92%	UMLP-16
FAN5701UMP20X	Parallel	6	2.7-5.5	20	Charge Pump	PWM	92%	UMLP-16
FAN5701UMP30X	Parallel	6	2.7-5.5	30	Charge Pump	PWM	92%	UMLP-16
FAN5702UC08X	Parallel	6	2.7-5.5	8	Charge Pump	Digital	92%	WL-CSP 16 Bumps
FAN5702UC15X	Parallel	6	2.7-5.5	15	Charge Pump	Digital	92%	WL-CSP 16 Bumps
FAN5702UC20X	Parallel	6	2.7-5.5	20	Charge Pump	Digital	92%	WL-CSP 16 Bumps
FAN5702UC30X	Parallel	6	2.7-5.5	30	Charge Pump	Digital	92%	WL-CSP 16 Bumps
FAN5702UMP08X	Parallel	6	2.7-5.5	8	Charge Pump	Digital	92%	UMLP-16
FAN5702UMP15X	Parallel	6	2.7-5.5	15	Charge Pump	Digital	92%	UMLP-16
FAN5702UMP20X	Parallel	6	2.7-5.5	20	Charge Pump	Digital	92%	UMLP-16
FAN5702UMP30X	Parallel	6	2.7-5.5	30	Charge Pump	Digital	92%	UMLP-16
FAN5333BSX	Serial	7	2.7-5.5	40	Async Boost	Analog	88%	SOT23-5
FAN5340UCX	Serial	5	2.7-5.5	40	Sync Boost	PWM	85%	WL-CSP 9 Bumps
FAN5340MPX	Serial	5	2.7-5.5	40	Sync Boost	PWM	85%	MLP-8
FAN5341UMPX	Serial	5	2.7-5.5	25	Async Boost w/ Built-in Schottky	Digital	83%	UMLP-6
FAN5343UMPX	Serial	6	2.7-5.5	25	Async Boost w/ Built-in Schottky	Digital	81%	UMLP-6

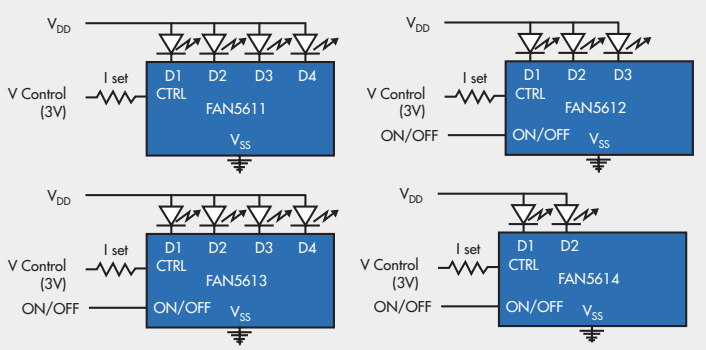

LED Drivers

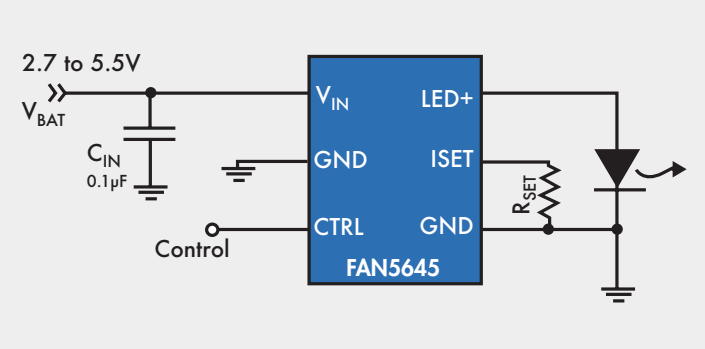

Indicator LED Blinker with Single-Wire Interface

Charge Pump DC-DC Converters

Product Number	V_{IN} (V)	V_{OUT} (V)	Output Current (mA)	Switching Frequency (MHz)	Max. Efficiency (%)	Package
FAN5665	2.9-5.5	5	30	1.2	92	WL-CSP 8 Bump
FAN5601	2.2-5.5	1.3-1.8	250	2	>85	MLP 3x3
FAN5602	2.7-5.5	3.3-5.0	200	1	90	MLP 3x3
FAN5631	2.2-5.5	1.2-1.5	250	1.5	90	MLP 3x3
FAN5632	2.2-5.5	1.2-1.5	250	1.5	90	MLP 3x3
FAN5701UC30X	2.7-5.5	2.7-5.5, ADJ	180 total	1.2	92	WL-CSP 1.61 x 1.61. 16 Bump
FAN5701UC20X	2.7-5.5	2.7-5.5, ADJ	120 total	1.2	92	WL-CSP 1.61 x 1.61. 16 Bump
FAN5701UC15X	2.7-5.5	2.7-5.5, ADJ	90 total	1.2	92	WL-CSP 1.61 x 1.61. 16 Bump
FAN5701UC08X	2.7-5.5	2.7-5.5, ADJ	48 total	1.2	92	WL-CSP 1.61 x 1.61. 16 Bump
FAN5701UMP30X	2.7-5.5	2.7-5.5, ADJ	180 total	1.2	92	3x3mm 0.55mm Thin MLP
FAN5701UMP20X	2.7-5.5	2.7-5.5, ADJ	120 total	1.2	92	3x3mm 0.55mm Thin MLP
FAN5701UMP15X	2.7-5.5	2.7-5.5, ADJ	90 total	1.2	92	3x3mm 0.55mm Thin MLP
FAN5701UMP08X	2.7-5.5	2.7-5.5, ADJ	48 total	1.2	92	3x3mm 0.55mm Thin MLP
FAN5702UC30X	2.7-5.5	2.7-5.5, ADJ	180 total	1.2	92	WL-CSP 1.61 x 1.61. 16 Bump
FAN5702UC20X	2.7-5.5	2.7-5.5, ADJ	120 total	1.2	92	WL-CSP 1.61 x 1.61. 16 Bump
FAN5702UC15X	2.7-5.5	2.7-5.5, ADJ	90 total	1.2	92	WL-CSP 1.61 x 1.61. 16 Bump
FAN5702UC08X	2.7-5.5	2.7-5.5, ADJ	48 total	1.2	92	WL-CSP 1.61 x 1.61. 16 Bump
FAN5702UMP30X	2.7-5.5	2.7-5.5, ADJ	180 total	1.2	92	3x3mm 0.55mm Thin MLP
FAN5702UMP20X	2.7-5.5	2.7-5.5, ADJ	120 total	1.2	92	3x3mm 0.55mm Thin MLP
FAN5702UMP15X	2.7-5.5	2.7-5.5, ADJ	90 total	1.2	92	3x3mm 0.55mm Thin MLP
FAN5702UMP08X	2.7-5.5	2.7-5.5, ADJ	48 total	1.2	92	3x3mm 0.55mm Thin MLP

Current Sense Amplifiers

Product Number	Input Voltage (V)	Accuracy @ V_{SENSE}	Supply Current I_s (µA)	Gain I_{OUT} V_{SENSE}	Bandwidth	Package
FAN4010	2 - 6	0.2% @ 100mV	3.5	10mA/V	2.0	SOT-23

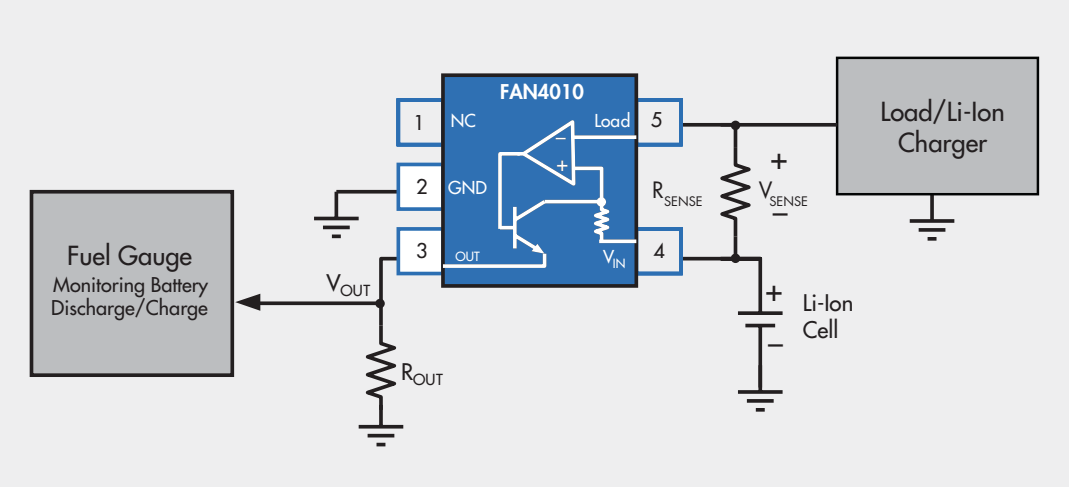

Current Sense Amplifier Application

Faster Li-Ion Battery Charging Without Thermal Issues

As the size of single cell and parallel cell Li-Ion battery sizes increases, charging them through a USB connection or with a linear charger becomes increasingly inefficient. The switch mode charger in the FAN5400 is up to 94% efficient, which enables faster charging with much lower thermal dissipation. An integrated 5V, 300mA boost regulator helps reduce component count and 3MHz switching speed reduces chip size and cost of external passives.

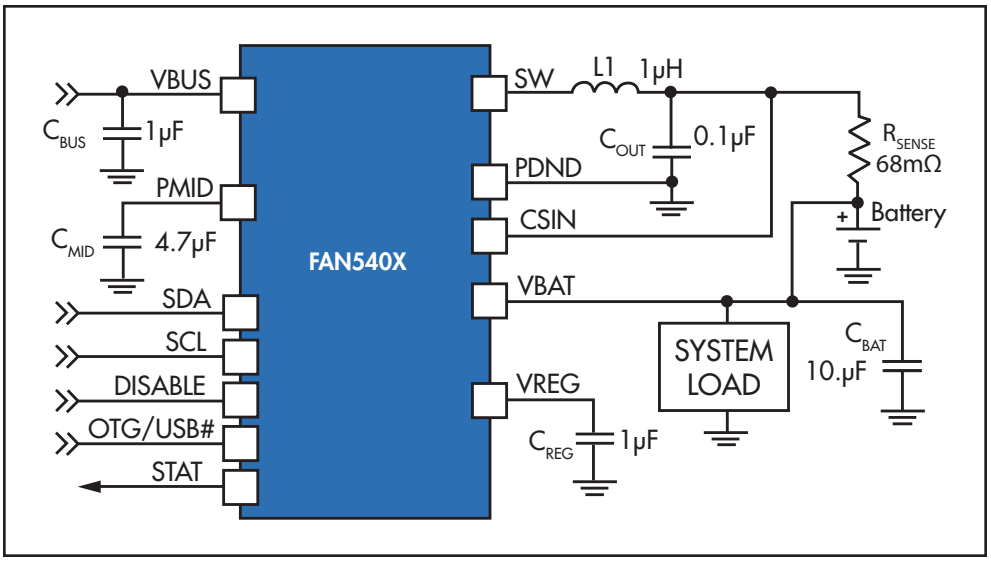

FAN5400 Family				
Product Number	Automatic Charger	Adaptive Input Current Limiting	Safety Limits	Battery Absent Behavior
FAN5400	Yes	No	No	Off
FAN5401	No	No	No	Off
FAN5402	Yes	No	No	On
FAN5403	Yes	Yes	Yes	Off
FAN5404	No	Yes	Yes	Off
FAN5405	Yes	Yes	Yes	On

USB Switches

Product Number	Type	Path Type	Port	Signal Range	R_{ON} (V)	C_{ON} (pF)	Bandwidth (MHz)	V_{CC} (V)	I_{CC} (A)	ESD HBM (kV)	Package
FSUSB104	DPDT (1x)	1 USB (HS / FS) 1 USB (HS / FS)	D+ / D-	0 to 4.3V	3.9	3.7	720	3.0 to 4.3	1µ	8	UMLP (UMX) (10-lead, 1.4x1.8mm, 0.4mm pitch)
FSUSB11	DPDT (1x)	1 USB (FS) 1 USB (FS)	D+ / D-	0 to V_{CC}	2.7	40	350	1.65 to 5.50	1µ	8	MicroPak (L10X) (10-lead, 1.6x2.1mm, 0.5mm pitch) TSSOP (MTCX) (14-lead, 5x6.4mm, 0.65mm pitch)
FSUSB20	DPDT (1x)	1 USB (HS / FS) 1 USB (HS / FS)	D+ / D-	0 to V_{CC}	5	12	750	3.0 to 3.6	1µ	7	MicroPak™ (L10X) (10-lead, 1.6x2.1mm, 0.5mm pitch) MSOP (MUX) (10-lead, 3x4.9mm, 0.5mm pitch) DQFN (BQX) (14-lead, 3.0x2.5mm, 0.5mm pitch)
FSUSB22	DPDT (1x) DPDT (1x)	1 USB (HS / FS) 1 USB (HS / FS) 1 USB (HS / FS) 1 USB (HS / FS)	D+ / D- D+ / D-	0 to V_{CC}	5	12	750	3.0 to 3.6	1µ	4	DQFN (BQX) (16-lead, 3.5x2.5mm, 0.5mm pitch) TSSOP (MTCX) (16-lead, 6.4x5mm, 0.65mm pitch) QSOP (QSCX) (16-lead, 6.5x5mm, 0.635mm pitch)
FSUSB23	DPDT (1x)	1 USB (HS / FS) 1 USB (HS / FS)	D+ / D-	0 to V_{CC}	6	9	720	3.0 to 3.6	1µ	7	DQFN (BQX) (16-lead, 3.5x2.5mm, 0.5mm pitch) MicroPak (L10X) (10-lead, 1.6x2.1mm, 0.5mm pitch)
FSUSB30	DPDT (1x)	1 USB (HS / FS) 1 USB (HS / FS)	D+ / D-	0 to V_{CC}	6.5	3.7	720	3.0 to 4.3	1µ	8	MicroPak (L10X) (10-lead, 1.6x2.1mm, 0.5mm pitch) DQFN (BQX) (14-lead, 3.0x2.5mm, 0.5mm pitch) MSOP (MUX) (10-lead, 3x4.9mm, 0.5mm pitch) UMLP (UMX) (10-lead, 1.4x1.8mm, 0.4mm pitch)
FSUSB31	SPST (2x)	1 USB (HS / FS)	D+ / D-	0 to V_{CC}	6.5	3.7	720	3.0 to 4.3	1µ	7.5	MicroPak (L108X) (10-lead, 1.6x1.6mm, 0.5mm pitch) UMLP (UMX) (8-lead, 1.2x1.4mm, 0.4mm pitch) US8 (K8x) (8-lead, 2x3.1mm, 0.5 pitch)
FSUSB40	DPDT (1x)	1 USB (HS / FS) 1 USB (HS / FS)	D+ / D-	0 to V_{CC}	3.9	5.9	720	3.0 to 4.3	1µ	7	MicroPak (L10X) (10-lead, 1.6x2.1mm, 0.5mm pitch) UMLP (UMX) (10-lead, 1.4x1.8mm, 0.4mm pitch)
FSUSB42	DPDT (1x)	1 USB (HS / FS) 1 USB (HS / FS)	D+ / D-	0 to V_{CC}	3.9	3.7	720	3.0 to 4.3	1µ	7	UMLP (UMX) (10-lead, 1.4x 1.8mm, 0.4mm pitch MSOP (MUX) (10-lead, 3x4.9mm, 0.5mm pitch)
FSUSB43	DPDT (1x)	1 USB (HS / FS) 1 USB (HS / FS)	D+ / D-	0 to V_{CC}	3.9	3.7	720	3.0 to 4.3	1µ	8	MicroPak (L10X) (10-lead, 1.6x2.1mm, 0.5mm pitch)
FSUSB45	DPDT (1x)	1 USB (HS / FS) 1 USB (HS / FS)	D+ / D-	0 to V_{CC}	3.9	7	720	3.0 to 4.3	1µ	7	MicroPak (L10X) (10-lead, 1.6x2.1mm, 0.5mm pitch) UMLP (UMX) (10-lead, 1.4x1.8, 0.4mm pitch)

USB Switches (Continued)

Product Number	Type	Path Type	Port	Signal Range	R_{ON} (Ω)	C_{ON} (pF)	Bandwidth (MHz)	V_{CC} (V)	I_{CC} (A)	ESD HBM (kV)	Package
FSUSB46	SPST (1x)	1 USB (HS / FS)	D+ / D-	0 to V_{CC}	3.9	7	720	3.0 to 4.3	1µ	7	MicroPak™ (L8X) (8-lead, 1.6x1.6mm, 0.5mm pitch) US8 (K8X) (8-lead, 3.1x2, 0.5mm pitch) UMLP (UMX) (8-lead, 1.2x1.4, 0.4mm pitch)
FSUSB63	3:1 SPDT (1x)	1 USB (HS/FS) 1 USB (HS/FS) 1 USB (HS/FS)	D+ / D-	0 to V_{CC}	6	5	830	2.7 to 4.3	1µA (Sleep) 10µA (Active)	5	UMLP (UMX) (12-lead, 1.8x1.8, 0.4mm pitch)
FSUSB73	2P3T (1x) 3:1 Mux + Isolation Switch	1 USB (HS / FS) 1 USB (HS / FS) 1 USB (HS / FS) 1 USB (HS / FS) Isolation	D+ / D-	-0.5 to 4.4V	6.5	7.5		2.5 to 4.4	9µA	2	UMLP (UMX) (16-lead, 1.8x2.6x0.55mm, 0.4mm pitch)
FSUSB74	2P4T (1x) 4:1 Mux	1 USB (HS / FS) 1 USB (HS / FS) 1 USB (HS / FS) 1 USB (HS / FS)	D+ / D-	-0.5 to 4.4V	6.5	7.5		2.5 to 4.4	9µA	2	UMLP (UMX) (16-lead, 1.8x2.6x0.55mm, 0.4mm pitch) MLP (MPX) (16-lead, 3x3x0.7mm, 0.5mm pitch)

Note: All products have Low I_{CCT} and Power-off protection

Multimedia Switches

Product Number	Type	Path Type	Port	Signal Range	R_{ON} (Ω)	C_{ON} (pF)	Bandwidth (MHz)	V_{CC} (V)	ESD HBM (kV)	Package
FSA110	DPST (2x)	USB	D+ / R D- / L	0 to 4.3V (USB)	–	–	–	2.7 to 4.3	2	UMLP (UMX) (10-lead, 1.4x1.8mm, 0.4mm pitch) US8 (K8X) (8-lead, 3.1x2mm, 0.5mm pitch)
		Audio (Neg. Swing)		(V_{AUDIO} - 4.3) to V_{AUDIO}	1.5	–	–	2.7 to 4.3		
FSA201	DPDT (1x)	1 USB (HS / FS)	D+ / R D- / L	0 to 3.6V (USB)	3	25	400	V_{BUS}	8	MicroPak (L10X) (10-lead, 1.6x2.1mm, 0.5mm pitch) MSOP (MUX) (10-lead, 3x4.9mm, 0.5mm pitch)
		1 Audio Path (Neg. Swing)		(V_{AUDIO} - 6.5) to V_{AUDIO}	0.5	29	–	V_{AUDIO} = 2.7 to 3.6		
FSA203	DPDT (1x) Video Filter SPDT (1x)	1 USB (HS / FS)	D+ / R D- / L	0 to 3.6V (USB)	4	7.6	780	V_{BUS}	6.5	DQFN (BQX) (20-lead, 2.5x4.5mm, 0.5mm pitch)
		1 Audio Path (Neg. Swing)		(V_{AV} - 5.5) to V_{AV}	3.5	9.7	–	V_{AV} = 3.0 to 3.6		
		ID	Vid / Mic	(V_{AV} - 5.5) to V_{AV}	3	10	615	V_{AV} = 3.0 to 3.6		
		1 Microphone		(V_{AV} - 5.5) to V_{AV}						
		1 Video Filter	Video Out	1.2 V_{PP}	2.5k	–	8	V_{AV} = 3.0 to 3.6		
FSA221	DPDT (1x)	1 USB (HS / FS)	D+ / R D- / L	0 to 3.6V (USB)	4	4.5	720	V_{BUS}	7.5	MicroPak (L10X) (10-lead, 1.6x2.1mm, 0.5mm pitch) MSOP (MUX) (10-lead, 3x4.9mm, 0.5mm pitch) UMLP (UMX) (10-lead, 1.4x1.8, 0.4mm pitch)
		1 Audio Path (Neg. Swing)		(V_{AV} - 5.5) to V_{AV}	3	9	–	V_{AUDIO} = 3.0 to 4.2		

Note: All products have Low I_{CCT} and Power-off protection

Multimedia Switches (Continued)

Product Number	Type	Path Type	Port	Signal Range	R_{ON} (Ω)	C_{ON} (pF)	Bandwidth (MHz)	V_{CC} (V)	ESD HBM (kV)	Package
FSA223	DPDT (1x)	1 USB (HS / FS)	D+ / R D- / L	0 to 3.6V (USB)	4	4.5	720	V_{BUS}= 2.7 to 5.5	3	MicroPak™ (L10X) (10-lead, 1.6x2.1mm, 0.5mm pitch) MSOP (MUX) (10-lead, 3x4.9mm, 0.5mm pitch) UMLP (UMX) (10-lead, 1.4x1.8mm, 0.4mm pitch)
		1 Audio Path (Neg. Swing)		(V_{AUDIO} - 5.5) to V_{AUDIO}	3	9	–	V_{AUDIO} = 2.7 to 5.5		
FSA321	DPDT (1x)	1 USB (HS / FS)	D+ / R D- / L	0 to 4.3V (USB)	8	5.4	720	V_{BUS}	8	UMLP (UMX) (10-lead, 1.4x1.8mm, 0.4mm pitch)
		1 Audio Path (Neg. Swing)		(V_{CC} - 4.3) to V_{CC}	1.8	5.4	–	1.8 to 4.3		
FSA801	3:1 Mux DPDT (1x) Charger Detect	1 USB (HS / FS)	D+ / R D- / L	0 to 4.4V (USB)	6	7.6	720	2.7 to 4.4	3	UMLP (UMX) (16-lead, 1.8x2.6x0.55mm, 0.4mm pitch)
		1 Audio Path (Neg. Swing)		V_{CC} - 7 to 2V	3	–	–			
		1 Microphone	V_{BUS} or D+	0 to V_{CC} - 1	15	–	–			
FSA806	3:1 Mux DPDT (1x)	1 USB (HS / FS) / UART	D+ / R D- / L	0 to 4.4V (USB)	6	6.8	–	2.7 to 4.4	3	UMLP (UMX) (12-lead, 1.8x1.8x0.55mm, 0.4mm pitch)
		1 Audio Path (Neg. Swing)		V_{CC} - 7 to 2V	3	–	–			
	2:1 Mux DPDT (1x)	1 USB (HS / FS) / UART		3.0 to 4.4V (USB)	8	6	–	3.0 to 4.4	4	
		1 USB (FS) / UART		0 to 3.6V (USB or UART)			–			
FSA880 / FSA881	DPDT (1x) w/ Accessory and Charger Detection	1 USB (HS / FS)	D+ / D-	0 to 3.6V	8	6		1.8 to 3.6	4	UMLP (UMX) (16-lead, 1.8x2.6x0.55mm, 0.4mm pitch)
		1 USB (HS / FS)								
FSA2000	DPDT (1x)	1 USB (HS / FS)	D+ / R D- / L	0 to 3.6V (USB)	4	8.8	720	V_{BUS}	2	UMLP (UMX) (16-lead, 2.6x1.8mm, 0.4mm pitch)
		1 Audio Path (Integrated 40mW Headphone Amplifier)		(-2.5) to 2.5V	–	–	–	2.7 to 4.3		
FSA9280A (7.2V OVP)	3:1 MUX Charger Detect, ID Detect Integrated FET OCP/OVP	1USB (HS/FS)	D+ / R D- / L	0 to 3.6V	8	8	–	V_{BAT} = 3.0 to 4.4 V_{BUS_IN} = 4 to 5 V_{DDIO} = 1.8 to 3.6	4	UMLP (UMX) (20-lead, 3x4mm, 0.5mm pitch)
		1USB (FS) / UART		0 to 3.6V	25	–	–			
FSA9288A (8V OVP)	3:1 MUX Charger Detect, ID Detect Integrated FET OCP/OVP	1 Audio Path (Neg. Swing)	D+ / R D- / L	-0.8 to 3.0V	3	–	–	V_{BAT} = 3.0 to 4.4 V_{BUS_IN} = 4 to 5 V_{DDIO} = 1.8 to 3.6	3.5	UMLP (UMX) (20-lead, 3x4mm, 0.5mm pitch)
		V_{BUS_OUT} or MIC	V_{BUS_IN} or MIC	0 to 5V	40	–	–			

Note: All products have Low I_{CCT} and Power-off protection.

Audio Analog Switches

Product Number	Type	Signal Range	R_{ON} (Ω)	V_{CC} (V)	Band-width (MHz)	C_{ON} (pF)	C_{OFF} (pF)	ESD HBM (kV)	Low I_{CCT}	Power-off Protection	Package
FSA2257	SPDT (2x)	0 to V_{CC}	0.95	1.65 to 5.5	200	40	12	8	–	–	MicroPak™ (L10X) (10-lead, 1.6x2.1mm, 0.5mm pitch) TSSOP (MTCX) (14-lead, 5x6.4mm, 0.65mm pitch) MSOP (MUX) (10-lead, 3x4.9mm, 0.5mm pitch)
FSA2258	SPDT (2x)	0 to V_{CC}	0.8	1.65 to 4.3	200	120	30	16	Yes	Yes	MicroPak (L10X) (10-lead, 1.6x2.1mm, 0.5mm pitch)
FSA2267	SPDT (2x)	0 to V_{CC}	0.35	1.65 to 3.6	45	126	30	7.5	–	–	MicroPak (L10X) (10-lead, 1.6x2.1mm, 0.5mm pitch) MSOP (MUX) (10-lead, 3x4.9mm, 0.5mm pitch)
FSA2267A	SPDT (2x)	0 to V_{CC}	0.35	2.3 to 4.3	45	126	30	7	Yes	–	MicroPak (L10X) (10-lead, 1.6x2.1mm, 0.5mm pitch) MSOP (MUX) (10-lead, 3x4.9mm, 0.5mm pitch)
FSA2268	SPDT (2x)	0 to V_{CC}	0.4	1.65 to 4.3	>50	120	30	16	Yes	Yes	UMLP (UMX) (10-lead, 1.4x1.8mm, 0.4mm pitch) MicroPak (L10X) (10-lead, 1.6x2.1mm, 0.5mm pitch)
FSA2268T	SPDT (2x)	0 to V_{CC}	0.4	1.65 to 4.3	>50	120	30	16	Yes	Yes	UMLP (UMX) (10-lead, 1.4x1.8mm, 0.4mm pitch) MicroPak (L10X) (10-lead, 1.6x2.1mm, 0.5mm pitch)
FSA2357	DP3T	0 to V_{CC}	0.55	2.6 to 4.5	>120	70	42	8	Yes	Yes	DQFN (BQX) (14-lead, 2.5x3mm, 0.5mm pitch) TSSOP (MTCX) (14-lead, 5x6.4mm, 0.65mm pitch)
FSA2467	DPDT (2x)	0 to V_{CC}	0.4	1.65 to 4.3	85	118	32	5.5	Yes	–	UMLP (UMX) (16-lead, 1.8x2.6mm, 0.4mm pitch) MLP (MPX) (16-lead, 3x3mm, 0.5mm pitch)
NEGATIVE SWING											
FSA2147	DPST (NO) (1x)	V_{CC} – 4.3 to V_{CC}	2.5	2.7 to 4.3	–	–	6	12	Yes	Yes	US8 (K8X) (8-lead, 2x3.1mm, 0.5 pitch)
FSA2269	SPDT (2x)	V_{CC} – 4.6 to V_{CC}	0.4	1.65 to 4.3	>50	120	30	12	Yes	Yes	UMLP (UMX) (10-lead, 1.4x1.8mm, 0.4mm pitch) WL-CSP (UCX) (12-ball, 1.2mm x 1.6mm, 0.4mm pitch) MicroPak (L10X) (10-lead, 1.6x2.1mm, 0.5mm pitch)
FSA2269TS	SPDT (2x)	V_{CC} – 4.6 to V_{CC}	0.4	1.65 to 4.3	>50	120	30	12	Yes	Yes	UMLP (UMX) (10-lead, 1.4x1.8mm, 0.4mm pitch) MicroPak (L10X) (10-lead, 1.6x2.1mm, 0.5mm pitch)
FSA2270T	SPDT (2x)	V_{CC} – 4.3 to V_{CC}	0.4	1.65 to 4.3	>50	120	30	11	Yes	Yes	UMLP (UMX) (10-lead, 1.4x1.8mm, 0.4mm pitch)
FSA2271T	SPDT (2x)	V_{CC} – 4.3 to V_{CC}	0.4	1.65 to 4.3	>50	120	30	10	Yes	Yes	UMLP (UMX) (10-lead, 1.4x1.8mm, 0.4mm pitch)
FSA2367	SPDT (3x)	V_{CC} – 5.5 to V_{CC} – 0.3	0.75	2.6 to 4.3	>150	55	20	8	Yes	Yes	DQFN (BQX) (14-lead, 2.5x3mm, 0.5mm pitch) TSSOP (MTCX) (14-lead, 5x6.4mm, 0.65mm pitch)
FSA2380	DP3T	V_{CC} – 5.5 to V_{CC} – 0.3	0.75	2.6 to 4.3	>120	70	42	8	Yes	Yes	DQFN (BQX) (14-lead, 2.5x3mm, 0.5mm pitch) TSSOP (MTCX) (14-lead, 5x6.4mm, 0.65mm pitch)
FSA6157	SPDT (1x)	V_{CC} – 4.3 to V_{CC}	0.8	1.65 to 4.3	50	150	30	16	Yes	Yes	MicroPak (L6X) (6-lead, 1.45x1mm, 0.5mm pitch)

Note: T-Termination, S-Slow turn-on available

Audio Jack Detection and Configuration Switches

Product Number	Detection	Switch Type	V_{DD} (V)	V_{IO} (V)	THD (MIC)	ESD (Air Gap) (kV)	Operating Temperature (°C)	Package
FSA8008A	3 or 4 pole Audio Jack Send/End (N/O)	MIC / Video	2.5 to 4.3	0 to V_{DD}	0.003% Typical	5	-40 to 85	UMLP (UMX) (10-lead, 1.4x1.8x0.55mm, 0.4mm pitch)
FSA8008	Accessory Plug-In, 3- or 4- Pole Audio Jack, Send/End Key Pressed	MIC	2.5 to 4.4	1.6 to V_{DD}	0.01% Typical	15	-40 to 85	UMLP (UMX) (10-lead, 1.4x1.8x0.55mm, 0.4mm pitch)
FSA8009	3 or 4 pole Audio Jack Send/End (N/O)	MIC / Video	2.5 to 4.3	0 to V_{DD}	0.003	5	-40 to 85	UMLP (UMX) (10-lead, 1.4x1.8x0.55mm, 0.4mm pitch)
FSA8029	3 or 4 pole Audio Jack, Send/End (N/O & N/C)	MIC / Video	2.5 to 4.3	0 to V_{DD}	0.003	5	-40 to 85	UMLP (UMX) (10-lead, 1.4x1.8x0.55mm, 0.4mm pitch)

Mobile High-Definition Link (MHL) Switch

Product Number	Standard	Switch Type	V_{DD} (V)	Bandwidth (GHz)	ESD (Air Gap) (kV)	Package
FSA3000	MHL Switch	DPDT (1x)	2.7 to 4.3	2.46	15	MicroPak™ (L10X) (10-lead, 1.6x2.11mm, 0.5mm pitch)
FSA3200	MHL Switch w/ID	DPDT (1x) + SPDT (1x)	2.7 to 4.3	2.34	15	UMLP (UMX) (16-lead, 1.8x2.6x0.55mm, 0.4mm pitch)

General Analog Switches

Product Number	Type	Signal Range	R_{ON} (Ω)	V_{CC} (V)	Bandwidth (MHz)	C_{ON} (pF)	C_{OFF} (pF)	ESD HBM (kV)	Low I_{CCT}	Power-off Protection	Package
FSA1156	SPST (NO) (1x)	0 to V_{CC}	0.75	1.65 to 5.5	300	65	20	8	–	–	MicroPak™ (L6X) (6-lead, 1.45x1mm, 0.5mm pitch) SC70 (P6X) (6-lead, 2x1.25mm, 0.65mm pitch)
FSA1157	SPST (NC) (1x)	0 to V_{CC}	0.75	1.65 to 5.5	300	65	20	8	–	–	MicroPak (L6X) (6-lead, 1.45x1mm, 0.5mm pitch) SC70 (P6X) (6-lead, 2x1.25mm, 0.65mm pitch)
FSA1256	SPST (NO) (2x)	0 to V_{CC}	0.95	1.65 to 5.5	300	27	11.5	5.5	–	–	MicroPak (L8X) (8-lead, 1.6x1.6mm, 0.5mm pitch)
FSA1256A	SPST (NO) (2x)	0 to V_{CC}	0.95	2.7 to 5.5	300	27	11.5	4.5	Yes	–	MicroPak (L8X) (8-lead, 1.6x1.6mm, 0.5mm pitch)
FSA1257	SPST (NC) (2x)	0 to V_{CC}	0.95	1.65 to 5.5	300	27	11.5	5.5	–	–	MicroPak (L8X) (8-lead, 1.6x1.6mm, 0.5mm pitch)
FSA1257A	SPST (NC) (2x)	0 to V_{CC}	0.95	2.7 to 5.5	300	27	11.5	4.5	Yes	–	MicroPak (L8X) (8-lead, 1.6x1.6mm, 0.5mm pitch)
FSA1258	SPST (NO/ NC) (2x)	0 to V_{CC}	0.95	1.65 to 5.5	300	27	11.5	5.5	–	–	MicroPak (L8X) (8-lead, 1.6x1.6mm, 0.5mm pitch)
FSA1258A	SPST (NO/NC) (2x)	0 to V_{CC}	0.95	2.7 to 5.5	300	27	11.5	4.5	Yes	–	MicroPak (L8X) (8-lead, 1.6x1.6mm, 0.5mm pitch)
FSA1259A	SPST (NO) (2x)	0 to V_{CC}	1	1.65 to 5.5	240	47	21	8	Yes	Yes	US8 (K8X) (8-lead, 2x3.1mm, 0.5 pitch)
FSA2156	SPST (NO) (1x)	0 to V_{CC}	0.4	3.0 to 4.3	80	115	38	8	Yes	–	MicroPak (L6X) (6-lead, 1.45x1mm, 0.5mm pitch) SC70 (P6X) (6-lead, 2x1.25mm, 0.65mm pitch)
FSA2466	DPDT (2x)	0 to V_{CC}	2.5	1.65 to 4.3	245	16	6	8	Yes	–	UMLP (UMX) (16-lead, 1.8x2.6mm, 0.4mm pitch)
FSA266	SPST (NO) (2x)	0 to V_{CC}	6	1.65 to 5.5	300	10	5	4	–	–	MicroPak (L8X) (8-lead, 1.6x1.6mm, 0.5mm pitch) US8 (K8X) (8-lead, 2x3.1mm, 0.5mm pitch)

General Analog Switches (Continued)

Product Number	Type	Signal Range	R_{ON} (Ω)	V_{CC} (V)	Bandwidth (MHz)	C_{ON} (pF)	C_{OFF} (pF)	ESD HBM (kV)	Low I_{CCT}	Power-off Protection	Package
FSA3157	SPDT (1x)	0 to V_{CC}	5	1.65 to 5.5	250	19	6.5	4	–	–	MicroPak™ (L6X) (6-lead, 1.45x1mm, 0.5mm pitch) SC70 (P6X) (6-lead, 2x1.25mm, 0.65mm pitch)
FSA3357	SP3T (1x)	0 to V_{CC}	5	1.65 to 5.5	250	14.5	3.6	5.5	–	–	MicroPak (L8X) (8-lead, 1.6x1.6mm, 0.5mm pitch) US8 (K8X) (8-lead, 2x3.1mm, 0.5mm pitch)
FSA4157	SPDT (1x)	0 to V_{CC}	0.95	1.65 to 5.5	350	40	12	7.5	–	–	MicroPak (L6X) (6-lead, 1.45x1mm, 0.5mm pitch) SC70 (P6X) (6-lead, 2x1.25mm, 0.65mm pitch)
FSA4157A	SPDT (1x)	0 to V_{CC}	0.95	2.7 to 5.5	350	40	12	7.5	Yes	–	MicroPak (L6X) (6-lead, 1.45x1mm, 0.5mm pitch) SC70 (P6X) (6-lead, 2x1.25mm, 0.65mm pitch)
FSA4159	SPDT (1x)	0 to V_{CC}	1	1.65 to 5.5	180	41	12	4	Yes	Yes	MicroPak (L6X) (6-lead, 1.45x1mm, 0.5mm pitch) SC70 (P6X) (6-lead, 2x1.25mm, 0.65mm pitch)
FSA5157	SPDT (1x)	0 to V_{CC}	0.35	1.65 to 3.6	45	90	21	8	Yes	–	MicroPak (L6X) (6-lead, 1.45x1mm, 0.5mm pitch) SC70 (P6X) (6-lead, 2x1.25mm, 0.65mm pitch)
FSA66	SPST (NO) (1x)	0 to V_{CC}	5	1.65 to 5.5	250	6	–	4	Yes	–	MicroPak (L6X) (6-lead, 1.45x1mm, 0.5mm pitch) SC70 (P5X) (5-lead, 2x1.25mm, 0.65mm pitch) SOT23 (M5X) (5-lead, 3x3mm, 0.95mm pitch)
FSA839	SPDT (1x)	0 to V_{CC}	0.8	1.65 to 5.5	50-60	150	50	8	Yes	Yes	WL-CSP (UCX) (6-ball, 1.6x0.76mm, 0.4mm pitch)
FSA859	SPDT (1x)	0 to V_{CC}	0.8	1.65 to 5.5	50-60	150	50	8	Yes	Yes	WL-CSP (UCX) (8-ball, 1.91x0.91mm, 0.5mm pitch)
FSAU3157	SPDT (1x)	0 to V_{CC}	5	1.65 to 5.5	250	18.5	6.5	4.5	–	–	SC70 (P6X) (6-lead, 2x1.25mm, 0.65mm pitch)
NC7SB3157	SPDT (1x)	0 to V_{CC}	5	1.65 to 5.5	250	18.5	6.5	4	–	–	MicroPak (L6X) (6-lead, 1.45x1mm, 0.5mm pitch) SC70 (P6X) (6-lead, 2x1.25mm, 0.65mm pitch)
NC7SBU3157	SPDT (1x)	0 to V_{CC}	5	1.65 to 5.5	250	18.5	6.5	4.5	–	–	SC70 (P6X) (6-lead, 2x1.25mm, 0.65mm pitch)
NC7SZ66	SPST (NO) (1x)	0 to V_{CC}	5	1.65 to 5.5	–	6	–	2	–	–	MicroPak (L6X) (6-lead, 1.45x1mm, 0.5mm pitch) SC70 (P5X) (5-lead, 2x1.25mm, 0.65mm pitch) SOT23 (M5X) (5-lead, 3x3mm, 0.95mm pitch)
NC7WB66	SPST (NO) (2x)	0 to V_{CC}	6	1.65 to 5.5	300	10	5	4	–	–	MicroPak (L8X) (8-lead, 1.6x1.6mm, 0.5mm pitch) US8 (K8X) (8-lead, 2x3.1mm, 0.5mm pitch)

Signal Routing Switches

Product Number	Type	Applications	R_{ON} (Ω)	V_{CC} (V)	Bandwidth (MHz)	C_{ON} (pF)	C_{OFF} (pF)	ESD HBM (kV)	Low I_{CCT}	Power-off Protection	Package
FSA1211	12PST (NC)	Camera	9	3 to 4.3	>720	6	2	5.5	Yes	–	UMLP (UMX) (28-lead, 3.5x4mm, 0.4mm pitch) UMLP (UDMX) Dual Row (28-lead, 3.6x2.9mm, 0.3mm pitch)
FSA1208	SPST (NC) (8x)	Memory	15	2.3 to 4.3	>400	6	2.5	7.5	Yes	–	MLP (BQX) (20-lead, 2.5x4.5mm, 0.5mm pitch)
FSA641	2:1 MUX	MIPI	7	2.65 to 4.3	720	8	2.5	6.5	Yes	–	UMLP (UMX) (20-lead, 3x3x0.55mm, 0.4mm pitch)
FSA642	TPDP 2-Data Lane & 1-CLK	MIPI	7	2.65 to 4.3	720	7	2.5	16	Yes	–	UMLP (UMX) (24-lead, 3x3x0.55mm, 0.4mm pitch)
FSA2457	DPDT (2x)	SIM/SD/MMC	5	2.7 to 3.6	>160	12	6	8	Yes	–	UMLP (UMX) (16-lead, 1.8x2.6mm, 0.4mm pitch)
FSA2567	4PDT (2x)	SIM/SD/MMC	6	2.7 to 4.3	>160	110	40	12	Yes	–	UMLP (UMX) (16-lead, 1.8x2.6mm, 0.4mm pitch) MLP (MPX) (16-lead, 3x3mm, 0.5mm pitch)
FSSD06	6PDT (1x)	SIM/SD/MMC	4	1.65 to 3.6; V_{DDH} to 3.6	120	9	4	8	Yes	–	MLP (BQX) (24-lead, 3.5x4.5mm, 0.5mm pitch) UMLP (UMX) (24-lead, 2.5x3.4mm, 0.4mm pitch)
FSSD07	6PDT (1x)	SIM/SD/MMC	4	1.65 to 3.6; V_{DDH} to 3.6	75	9	4	8	Yes	–	MLP (BQX) (24-lead, 3.5x4.5mm, 0.5mm pitch) UMLP (UMX) (24-lead, 2.5x3.4mm, 0.4mm pitch)
FSA3259	SP3T (2x)	UART	5	1.65 to 5.5	250	14.5	3.6	5.5	–	–	DQFN (BQX) (14-lead, 2.5x3mm, 0.5mm pitch)

USB Transceivers

Product Number	Speed	USB Spec	Driver Input Mode	Driver I/O (I/O or separate inputs and outputs)	V_{BUS} Regulator	Voltage Translation	Features	Package
USB1T11A	LS, FS	1.1	Differential or SE	Separate	No	No	–	SOIC (MX) (14-lead, 8.75x6mm, 1.27mm pitch) TSSOP (MTCX) (14-lead, 5x6.4mm, 0.65mm pitch)
USB1T20	LS, FS	2	Differential or SE	Separate	No	No	–	TSSOP (MTCX) (14-lead, 5x6.4mm, 0.65mm pitch)
USB1T1103	FS	2	Differential	I/O	Yes	Yes	Functional Equivalent to ISP1102	MLP (MPX) (14-lead, 2.5x2.5mm, 0.5mm pitch) MLP (MHX) (16-lead, 3x3mm, 0.5mm pitch)
USB1T1105A	FS	2	Differential or SE	Separate	Yes	Yes	–	MLP (MHX) (16-lead, 3x3mm, 0.5mm pitch)
FUSB1500	LS, FS	2	SE	Separate	No	Yes	Charger detect (resistive)	MLP (MHX) (16-lead, 3x3mm, 0.5mm pitch)
FUSB2500	HS	2	SE	Separate	No	Yes	Charger detect (resistive)	BGA (GFX) (36-ball, 3.5x3.5mm, 0.5mm pitch)
FUSB2805	HS	2	SE	Separate	No	Yes	–	MLP (MLX) (32-lead, 5x5x0.8mm, 0.5mm pitch)

µSerDes

Product Number	Number of Bits	Serial IO	Speed (MHz)	ESD (kV)	Package
FIN210AC	10	CTL	48	15	MLP (MLX), (32-lead, 5x5mm, 0.5mm pitch) BGA (GFX), (42-ball, 4.5x3.5mm, 0.5mm pitch)
FIN212AC	12	CTL	40	14	MLP (MLX), (32-lead, 5x5mm, 0.5mm pitch) BGA (GFX), (42-ball, 4.5x3.5mm, 0.5mm pitch)
FIN224C	24	CTL	20	15	MLP (MLX), (40-lead, 6x6mm, 0.5mm pitch)
FIN224AC	22	CTL	20	15	MLP (MLX), (40-lead, 6x6mm, 0.5mm pitch) BGA (GFX), (42-ball, 4.5x3.5mm, 0.5mm pitch)
FIN324C	24	CTL	15	14.5	MLP (MLX), (40-lead, 6x6mm, 0.5mm pitch) BGA (GFX), (42-ball, 4.5x3.5mm, 0.5mm pitch)
FIN424C	20	CTL	10	15	MLP (MLX), (32-lead, 5x5mm, 0.5mm pitch)
FIN425C	20	CTL	10	15	MLP (MLX), (32-lead, 5x5mm, 0.5mm pitch)

Operational Amplifiers

Product Number	Number of Amps	Power down	RRIO	BW[2] (MHz)	SR (V/µs)	I_S [3] (mA)	I_{OUT} (mA)	V_{IO} (mV)	I_b (µA)	A_{OL} (dB)	Min. V_S (V)	Max. V_S (V)	Package
FAN4174	1	No	Both	3.7[1]	3	0.2	+34, -12	0	5pA	102	2.5	5.5	SOT23-5, SC70-5
FAN4274	2	No	Both	3.7[1]	3	0.2	+34, -12	0	5pA	102	2.5	5.5	MSOP-8
FAN4851*	1	No	Yes	9	6.1	0.8	46	0.3	100nA	115	2.5	5	SOT23-5, SC70-5
FAN4852	2	No	Yes	9	6.1	0.8	46	0.3	100nA	115	2.5	5	MSOP-8
FAN4931	1	No	Both	3.7[1]	3	0.2	+34, -12	0	5pA	102	2.5	5.5	MSOP-8

**In Development*
Note[1] Gain bandwidth product
Note[2] Small signal bandwidth, G=2
Note[3] Supply current per channel

Video Filter Drivers

Product Number	Input Format	Output Format	Channels	Cutoff Frequency	Package
FMS6141	Composite	Composite	1	7.1	SOIC-8 & SC70-5
FMS6151	Composite	Composite	1	8	MicroPak™

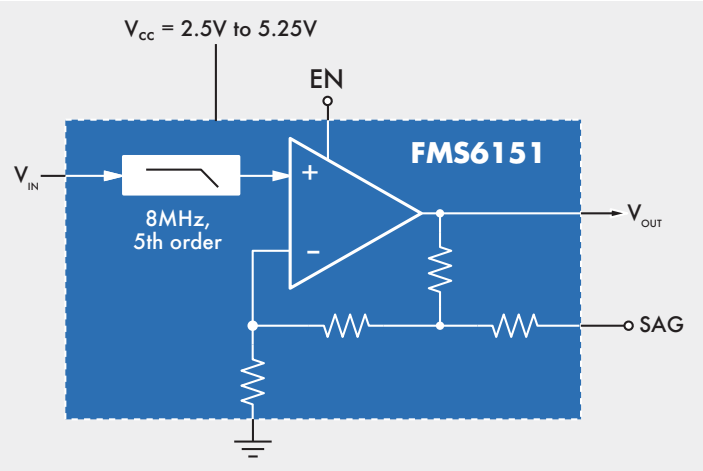

Video Filter Driver

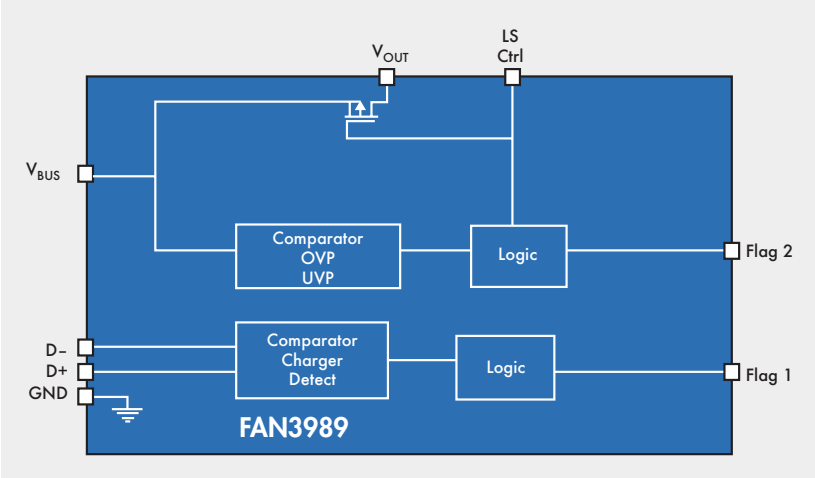

USB Over Voltage Protection (OVP)

The USB Over Voltage Protection (OVP) family provides a new function for cell phone USB charging over voltage protection.

USB Over Voltage Protection (OVP)

Product Number	OVP[1]	UVP[2]	Charger Detect	Std USB Detect	OV Flag Output	UV Flag Output	Input Detect Flag Output	Load Switch
FAN3988	Yes	Yes	Yes	Yes	Yes	Yes	Yes	No
FAN3989	Yes	Yes	Yes	Yes	Yes	Yes	Yes	Yes

Note [1] Over voltage protection
Note [2] Under voltage protection

Translators

Family	Product Number	Application	Number of Bits / Channels	Type	Static Drive	Pins	Dimensions (mm)	Voltage Range (V)	Description	Package
FX-A Auto Direction Translators	FXLA101	Mobile	1	Auto	100µA	6	1.0 x 1.45	1.1 - 3.6	1-Bit Level Shifting Auto Direction Transceiver with 3-State Outputs	MicroPak™, SC70, MicroPak2™
	FXLA102	Mobile	2	Auto	100µA	8	1.6 x 1.6	1.1 - 3.6	2-Bit Level Shifting Auto Direction Transceiver with 3-State Outputs	MicroPak
	FXLA104	Mobile	4	Auto	100µA	12, 16	1.8 x 1.8	1.1 - 3.6	4-Bit Level Shifting Auto Direction Transceiver with 3-State Outputs	UMLP
	FXLA108	Mobile	8	Auto	100µA	20	2.5 x 4.5	1.1 - 3.6	8-Bit Level Shifting Auto Direction Transceiver with 3-State Outputs	DQFN
	FXMA108	Mobile	8	Auto	100µA	20	2.5 x 4.5	1.65 - 5.5	8-Bit Level Shifting Auto Direction Transceiver with 3-State Outputs	DQFN
FXL Translators	FXLH1T45	Mobile	1	B	18mA	6	1.0 x 1.45	1.1 - 3.6	1-Bit Level Shifting Transceiver with 3-State Outputs	MicroPak
	FXLP34	Mobile	1	U	2.6mA	6	1.0 x 1.0	0.9 - 3.6	Uni-directional, 1-Bit Level Shifting Buffer	MicroPak, MicroPak2, SC70
	FXL2T245	Mobile	2	B	24mA	10	1.6 x 2.1	1.1 - 3.6	2-Bit Level Shifting Transceiver with 3-State Outputs	MicroPak
	FXL2TD245	Mobile	2	B	24mA	10	1.6 x 2.1	1.1 - 3.6	2-Bit Level Shifting Transceiver with Independent Direction Control & 3-State Outputs	MicroPak
	FXL4T245	Mobile	4	B	24mA	14	2.5 x 3.0	1.1 - 3.6	4-Bit Level Shifting Transceiver with 3-State Outputs	DQFN
	FXL4TD245	Mobile	4	B	24mA	16	1.8 x 2.6	1.1 - 3.6	4-Bit Level Shifting Transceiver with Independent Direction Control & 3-State Outputs	UMLP
	FXL5T244	Mobile	5	U	24mA	14	2.5 x 3.0	1.1 - 3.6	Uni-directional 5-Bit Level Shifting Buffer with 3-State Outputs	DQFN
	FXL4245	Mobile	8	B	24mA	24	3.5 x 4.5	1.1 - 3.6	8-Bit Level Shifting Transceiver with 3-State Outputs	MLP
	FXLH42245	Mobile	8	B	24mA	24	3.5 x 4.5	1.1 - 3.6	8-Bit Level Shifting Transceiver 26Ω Output Series Resistors with 3-State Outputs	MLP
Speciality	FXMA2102	I²C, SMBus	2	H	NA	8	1.2 x 1.4	1.65 - 5.5	2-Bit Level Shifting I²C Transceiver with 2 Power Supplies and Open Drain Outputs	MicroPak, UMLP
	FXLA2203	SIM Card	8	H, U, PS	2.6mA	24	2.5 x 3.4	1.65 - 3.6	Dual Host Dual SIM Card Translator	UMLP
	FXLP4555	SIM Card	3	H, U, L	15mA	16	3.0 x 3.0	1.65 - 5.5	SIM Card Power Supply and Level Shifter	MLP
	FXMAR2102	I²C, SMBus	2	H	NA	8	1.2 x 1.4	1.65 - 5.5	2-Bit Level Shifter I²C with 2 Power Supplies and Push Pull Outputs	MicroPak, UMLP
	FXMAR2104	I²C, SMBus	4	H	NA	12	1.8 x 1.8	1.65 - 5.5	4-Bit Dual Supply Open Drain and Push-Pull Translator	UMLP
	FXMA2104	I²C, SMBus	4	H	NA	12	1.8 x 1.8	1.65 - 5.5	4-Bit Dual Supply Open Drain Translator	MicroPak, UMLP
LVX Translators	74LVX3245	Broad Market	8	B	24mA	24	4 x 7.8	3.0 - 5.5	8-Bit Level Shifting Transceiver with 3-State Outputs; VCCA=3V, VCCB = 5V	TSSOP, QSOP, SOIC
	74LVX4245	Broad Market	8	B	24mA	24	4 x 7.8	3.0 - 5.5	8-Bit Level Shifting Transceiver with 3-State Outputs; VCCA = 5V, VCCB = 3V	TSSOP, QSOP, SOIC
	74LVXC3245	PCMCIA	8	B	24mA	24	4 x 7.8	3.0 - 5.5	8-Bit Configurable Level Shifting Transceiver with 3-State Outputs; VCCA = 3V, VCCB = 3-5V	TSSOP, QSOP, SOIC
	74LVXC4245	PCMCIA	8	B	24mA	24	4 x 7.8	3.0 - 5.5	8-Bit Configurable Level Shifting Transceiver with 3-State Outputs; VCCA = 5V, VCCB = 3-5V	TSSOP, QSOP, SOIC
VCX Translators	74VCX163245	Broad Market	16	B	24mA	48	6.1 x 12.5	1.8 - 3.6	16-Bit Level Shifting Transceiver with 3-State Outputs; VCCA = 2.3 - 3.6V, VCCB = 1.65 - 2.7V	TSSOP
	74VCX164245	Broad Market	16	B	24mA	48	6.1 x 12.5	1.8 - 3.6	16-Bit Level Shifting Transceiver with 3-State Outputs; VCCA = 1.65 - 2.7V, VCCB = 2.3 - 3.6V	TSSOP

Auto: Auto Direction with Bus Hold, B:Bi-directional with direction pin, U:Uni-directional, H:Hybrid Auto Direction for Open Drain, PS:Power Switch, L:LDO, DB:DC Boost

Reset Timers

	Supply Voltage (V)	Delay Time (s)	I_{CC} @ Supply Current (µA)	Package
FT7521	1.65 - 5.0	7.5	1	6-lead MicroPak™, 1.0 x 1.45, 0.5mm Pitch
FT8010	1.65 - 5.0	7.5 or 11.25	20	10-lead UMLP, 1.4 x 1.8 x 0.55mm, 0.40 Pitch
FT3001	1.65 - 5.0	3, 3.75, 4.5, 6.0	5	10-lead UMLP, 1.4 x 1.8 x 0.55mm, 0.40 Pitch

TinyLogic®

Product Number	V_{CC} Min.	V_{CC} Max.	Output Characteristics	Number of Inputs	Additional Features	Package
NC7SVL04	.9	3.6	0 - 3.6	1	Low I_{CCT} for low power consumption	MicroPak2™, MicroPak, SC70
NC7SVL08	.9	3.6	0 - 3.6	2	Low I_{CCT} for low power consumption	MicroPak2, MicroPak, SC70
NC7SVL32	.9	3.6	0 - 3.6	2	Low I_{CCT} for low power consumption	MicroPak2, MicroPak, SC70

Family Comparison

Family	Standard Logic Family Equivalent	I_{CC} (µA)	V_{CC} (V)	Drive (mA @ V)	Speed (ns @ V)
AUP	AUP	0.9	0.8 – 3.6	±/-4.0 @ 3.0	6.3 @ 3.6
HS	HC	10	2 - 6	±1.1 @ 3.0; ±2.0 @ 4.5	25 @ 4.5
HST	HCT	10	4.5 - 5.5	±2.0 @ 4.5	20 @ 2.0
UHS	LCX/LVC	20	1.8 - 5.5	±4.0 @ 1.65; ±24.0 @ 3.3	4.7 @ 3.3
ULP	–	0.9	0.9 - 3.6	±1.0 @ 1.5; ±2.6 @ 3.0	16 @ 1.5; 7.0 @ 3.3
ULP-A	VCX	0.9	0.9 - 3.6	±2.0 @ 1.1; ±24 @ 3.3	6 @ 1.1; 1.5 @ 3.3

Functional Description (S Single-Bit Logic; W Dual-Bit Logic; N Triple-Bit Logic)	Device Type	Family				Packages					
		HS (NC7)	HST (NC7xT)	UHS (NC7xZ)	ULP/ULP-A (NC7xP/NC7xV)	SOT-23 5-lead	SC70 5-lead	SC70 6-lead	USB 8-lead	MicroPak 6-lead	MicroPak 8-lead
NAND Gate	00	S	S	S W	S W	S	S	–	W	S	W
NOR Gate	02	S	S	S W	S W	S	S	–	W	S	W
Inverter	04	S	S	S W N	S W N	S	S	W	N	S W	N
Unbuffered Inverter	U04	S	–	S W N	S	S	S	W	N	S W	N
Inverter w/Open Drain Output	05	–	–	S	S	S	S	–	–	S	–
Buffer w/Open Drain Output	07	–	–	W	W	–	–	W	–	W	–
AND Gate	08	S	S	S W	S W	S	S	–	W	S	W
3-Input NAND Gate	10	–	–	S	–	–	–	S		S	–
3-Input AND Gate	11	–	–	S	S	–	–	S	–	S	–
Inverter w/Schmitt Trigger Input	14	S	–	S W N	S W N	S	S	W	N	S W	N
Dual Buffer	16	–	–	W	–	–	–	W	–	W	–
Buffer w/Schmitt Trigger Input	17	–	–	W N	S W	–	S	W	N	S W	N
1 of 2 Demux w/3-State Output	18	–	–	S	–	–	–	S	–	S	–
1 of 2 Decoder/Demultiplexer	19	–	–		S	–	–	S	–	S	–
3-Input NOR Gate	27	–	–	S	–	–	–	S	–	S	–
OR Gate	32	S	S	S W	S W	–	S	–	W	S	W
Buffer	34	–	–	N	S N	–	S	–	N	S	N
NAND Gate w/Open Drain Output	38	–	–	S W	S W	–	S	S	W	S	W
Universal Configurable 2-Input Gate	57	–	–	S	S	–	–	S	–	S	–
Universal Configurable 2-Input Gate	58	–	–	S	S	–	–	–	–	S	–
D Flip-Flop w/Pre-set and Clear	74	–	–	S	S	–	–	–	S	–	S
XOR Gate	86	S	S	S W	S W	S	S	–	W	S	W
Buffer w/Low Enabled 3-State Output	125	–	–	S W	S W	S	S	–	W	S	W
Buffer w/High Enabled 3-State Output	126	–	–	S W	S W	S	S	–	W	S	W
NAND Gate w/Schmitt Trigger Input	132	–	–	W	W	–	–	–	W	–	W
2-Input Non-inverting Multiplexer	157	–	–	S	S	–	–	S	–	S	–
2-Input Inverting Multiplexer	158	–	–		S	–	–	S	–	S	–
D Flip-Flop w/Asynchronous Clear	175	–	–	S	–	–	–	S	–	S	–
Inverting Buffer w/3-State Output	240	–	–	W	W	–	–	–	W	–	W
Inverting Buffer w/ High-/Low-enabled 3-State Output	241	–	–	W	W	–	–	–	W	–	W
3-Input OR Gate	332	–	–	S	–	–	–	S	–	S	–
D Latch w/3-State Output	373	–	–	S	–	–	–	S	–	S	–
D Flip-flop w/3-State Output	374	–	–	S	–	–	–	S	–	S	–
3-Input XOR Gate	386	–	–	S	–	–	–	S	–	S	–

APPLICATION BLOCK DIAGRAMS

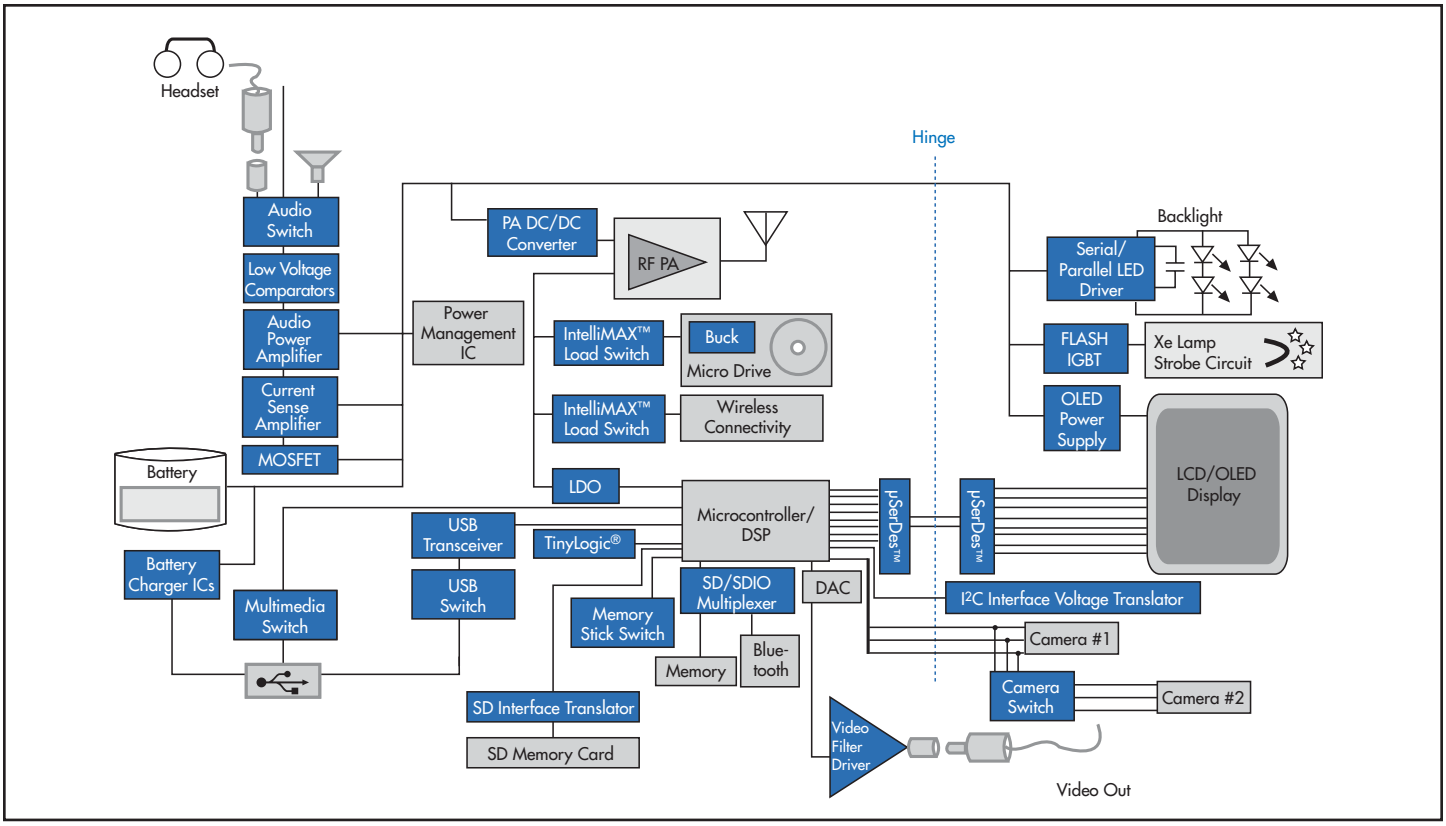

Cell Phone

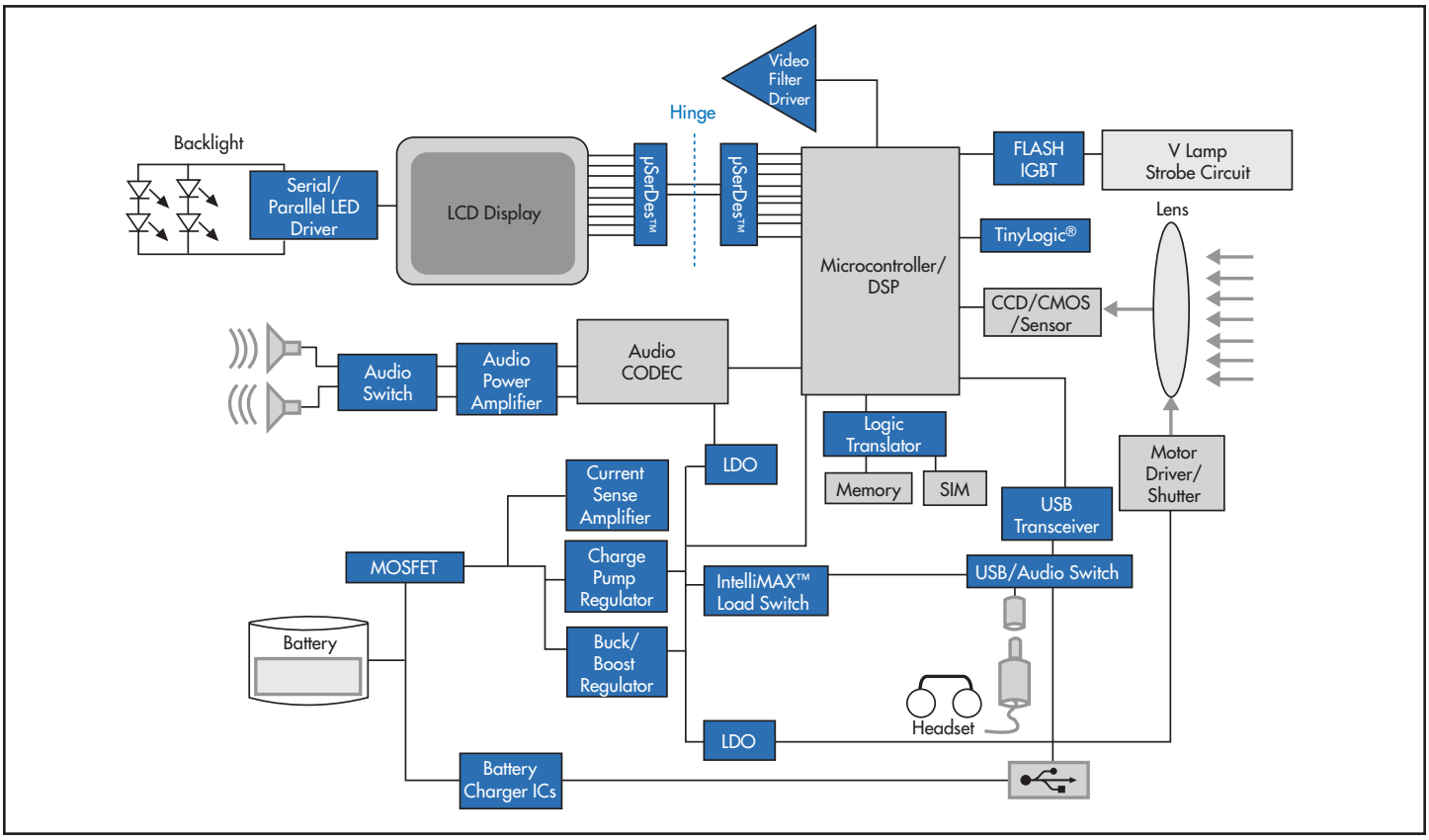

Digital Still Camera

Note: All Fairchild parts are highlighted in blue

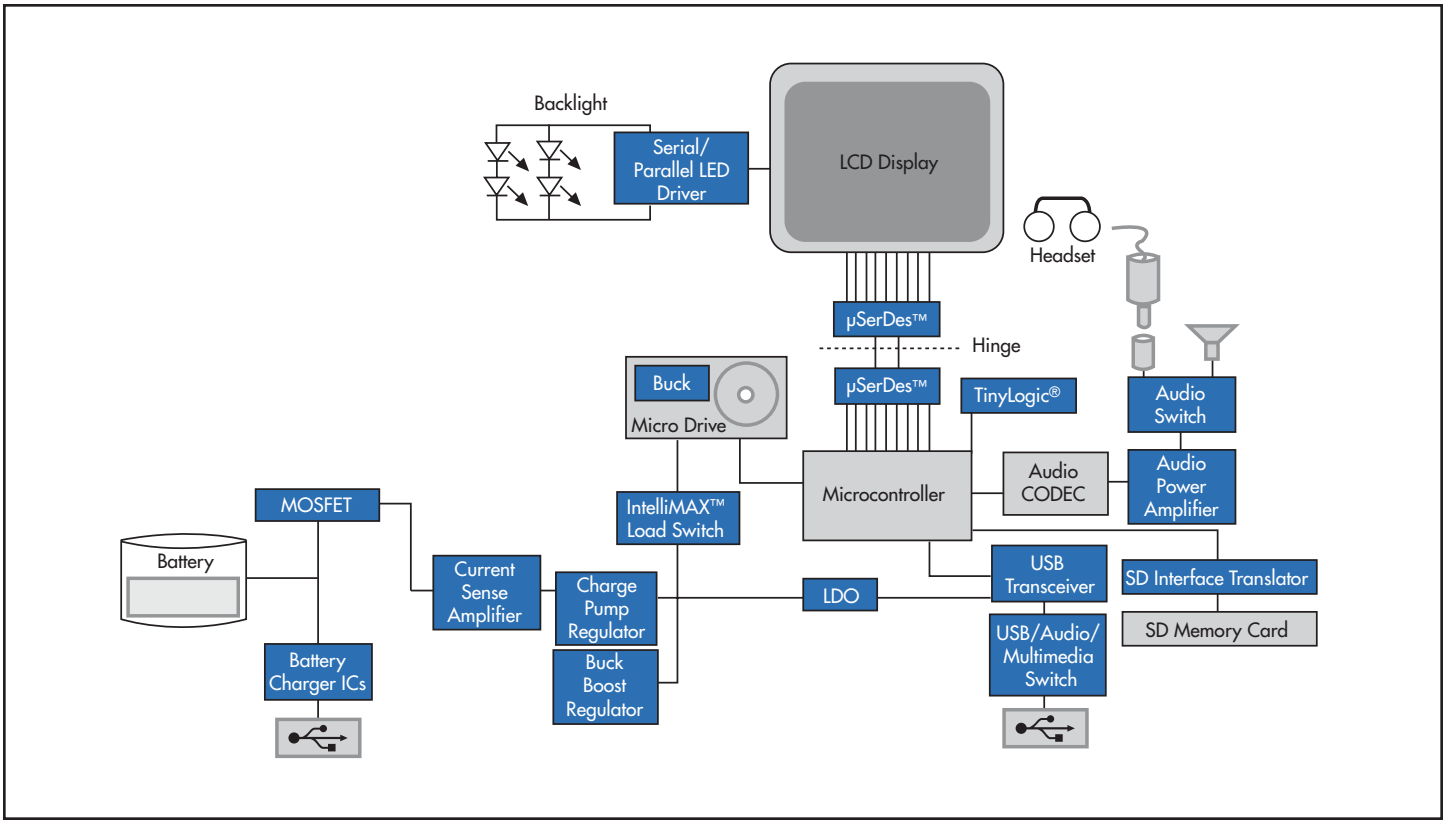

MP3 Player

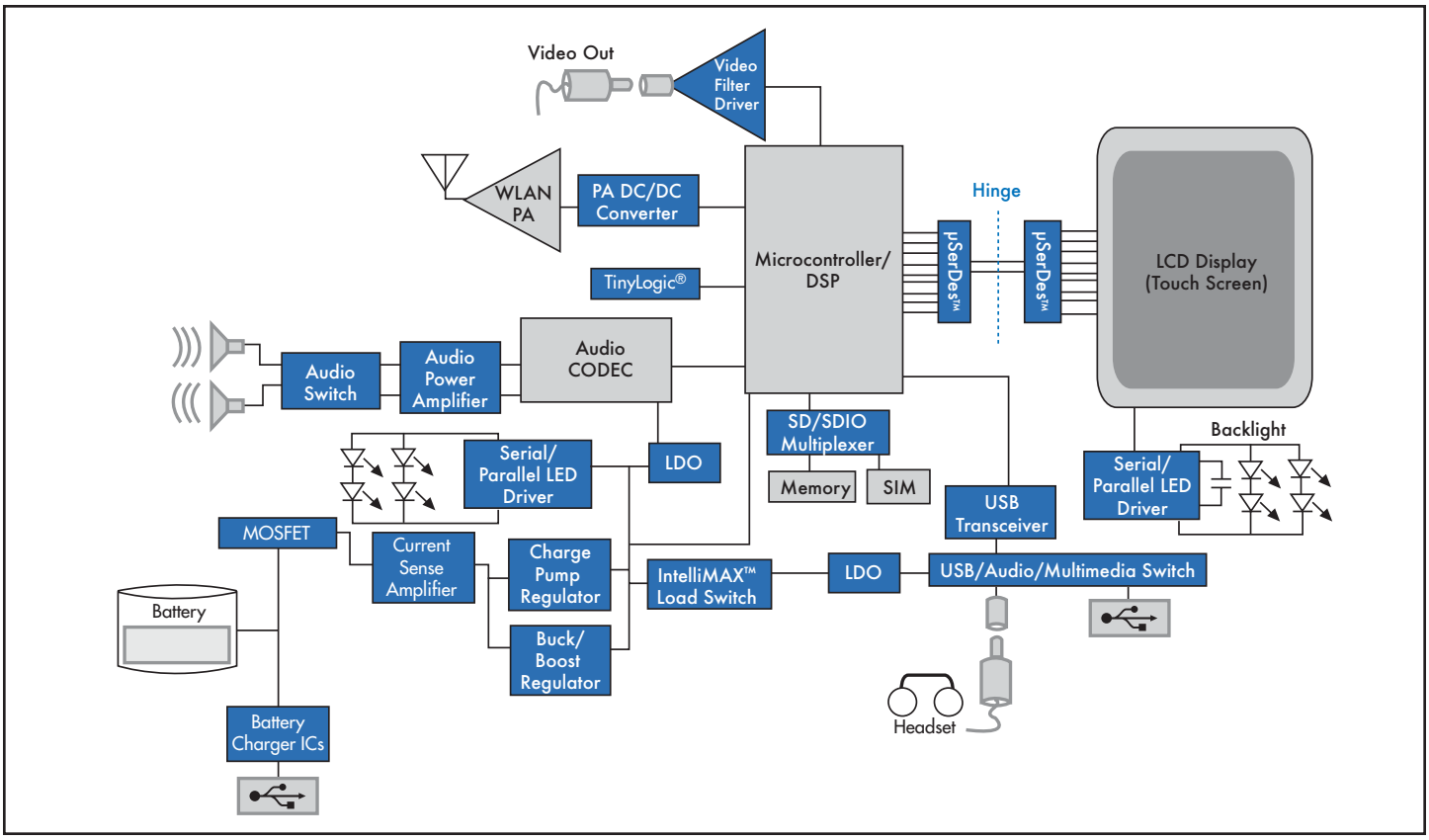

PDA

Note: All Fairchild parts are highlighted in blue

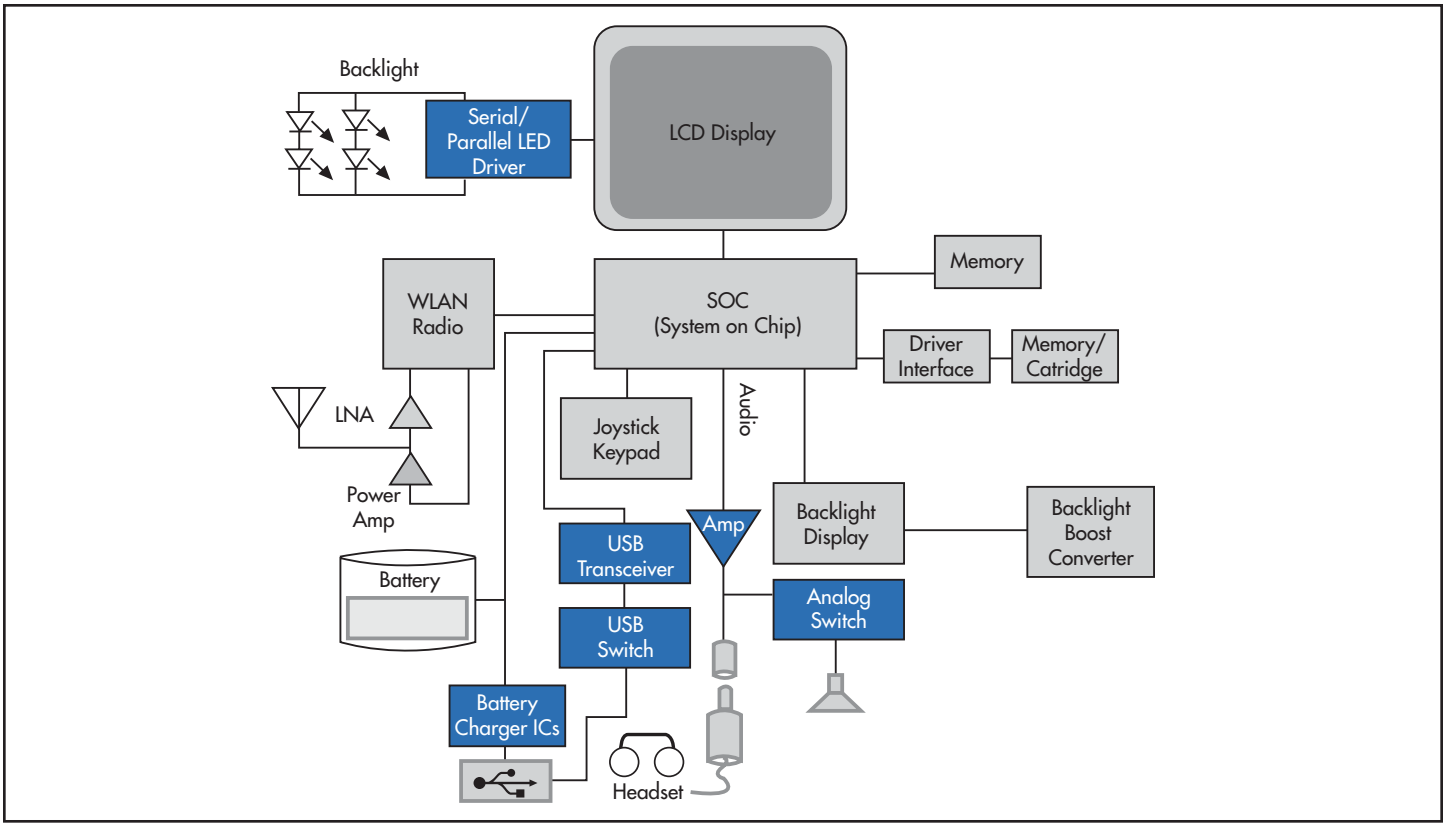

Portable Gaming Device

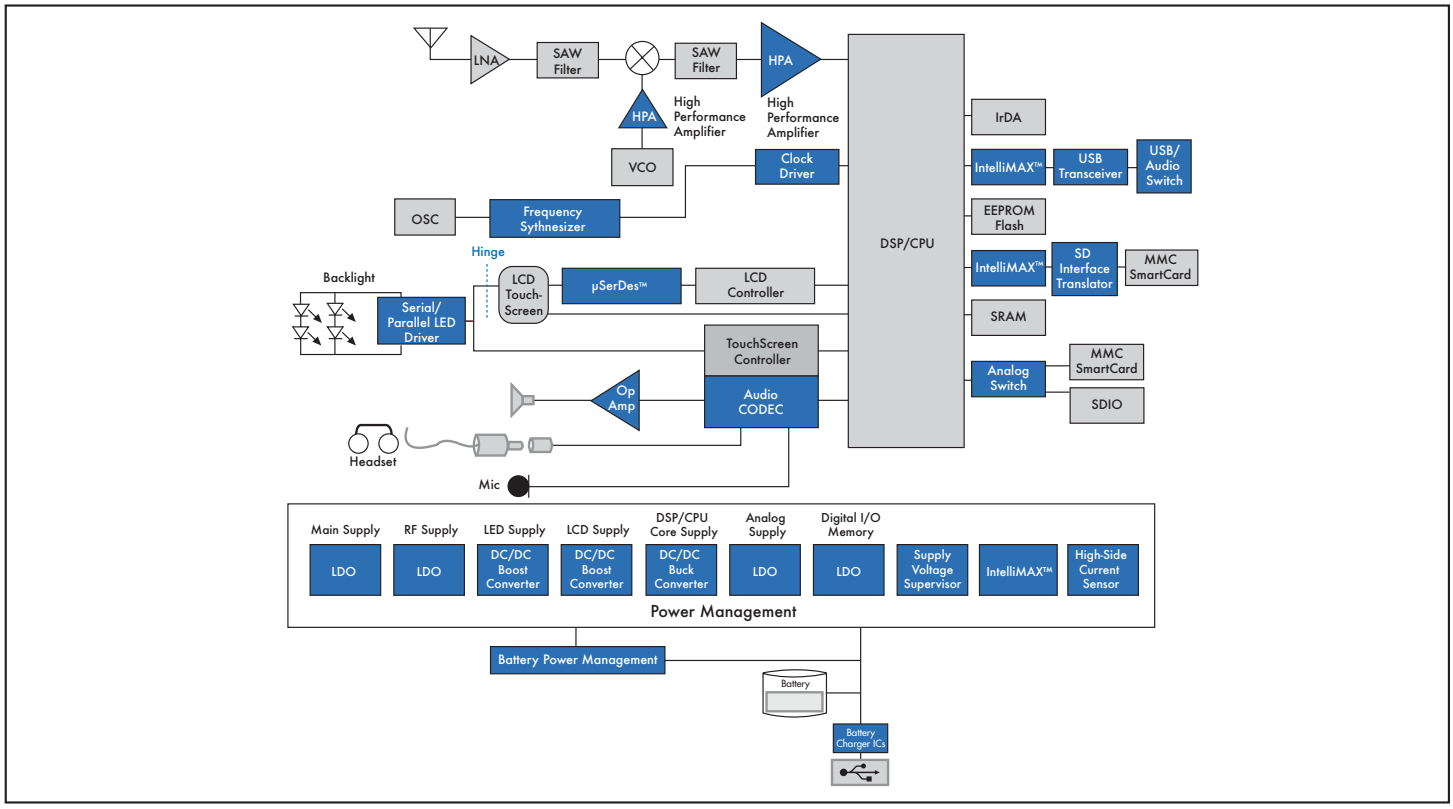

GPS

Note: All Fairchild parts are highlighted in blue

PACKAGING TECHNOLOGIES

For more informations please visit www.fairchildsemi.com/packaging/

As a world leader in high performance semiconductors specializing in products for the optimization of system power, Fairchild Semiconductor offers you the most advanced packages designed for minimal size, highest reliability and maximum thermal performances. One hundred percent of Fairchild's products are RoHS (Restriction of Hazardous Substances in Electrical and Electronic Equipment) compliant and are qualified with lead-free alternative plating materials.

Overview of Fairchild Packaging Technology

Package Type	Package Image	Dimension (mm)	Package Type	Package Image	Dimension (mm)
MLP-8 Lead Dual		3x1.9	SO-8	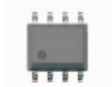	5x6
MLP-8 Lead Single		3x1.9	SSOT-6		3x3
MicroPak™		6, 8 & 10 Leads	SOT23-5		1.6x2.9
MicroPak2™		1x1	WL-CSP 4 ball		1x1
MLP 2x5		2x5	WL-CSP 5 ball	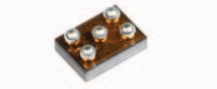	1x1.37
MLP 3x3	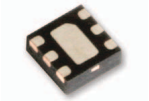	3x3	WL-CSP 6 ball		1x1.5
MLP (MicroFET™)		2x2 & 1.6x1.6	WL-CSP 8 ball	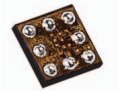	1.21x1.21
MLP 1.6x1.6	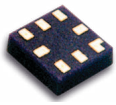	1.6x1.6	WL-CSP 16 ball		1.6x1.6
DQFN		14, 16, 20, 24 Leads	M-CSP	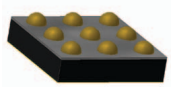	Exact dimensions based on die size
SC70-6		2x2.1	UMLP-6		2x2
SC70-5		2x2.1	UMLP-10		1.4x1.8
SOIC-14		14 Leads	UMLP-16	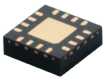	1.8x2.6
SOIC-16		16 Leads			

GLOBAL POWER RESOURCE℠

Engineers need a comprehensive portfolio of components and design support services to solve today's power and energy problems. It is this foundation of practical solutions that has allowed us to deploy the industry standard for customer support. We call it our Global Power Resource (GPR)—and here are some of the ways you can leverage it for your designs.

Online Support—Our power and application engineers in the labs, and in the field, have combined their skills to offer a comprehensive suite of design and knowledge tools. These are available 24/7 in the Design Center on our website. The Design Center includes application notes, eval boards, online design tools, videos, podcasts etc.

GPR Centers—Each is a fully-equipped applications laboratory, staffed by a PhD-level team of power engineers. These regional centers can take a design from concept, to full schematics, to a completed board with fully characterized engineering and manufacturing files, or to any stage in between.

Field Application Engineers—Our FAEs are power engineers, with years of design experience. They bring the full range of Fairchild's power expertise to your facility, to be an extension of your design team.

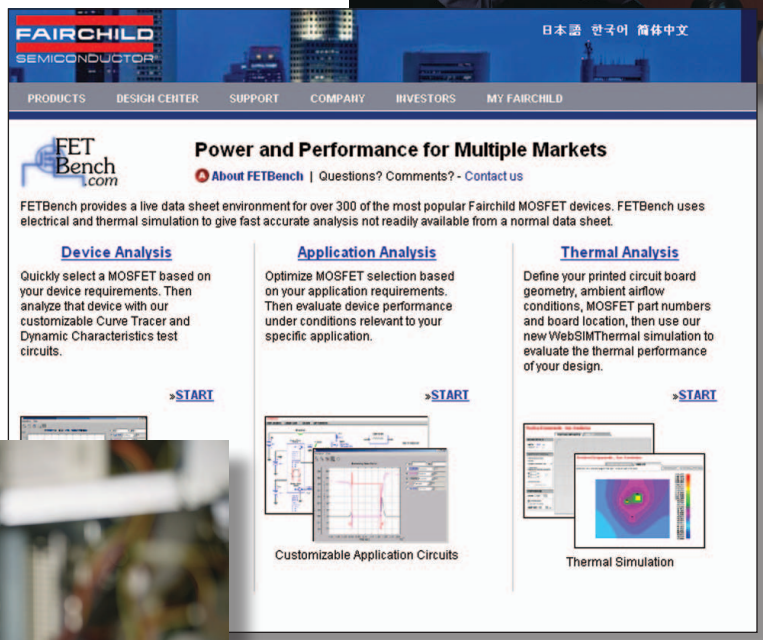

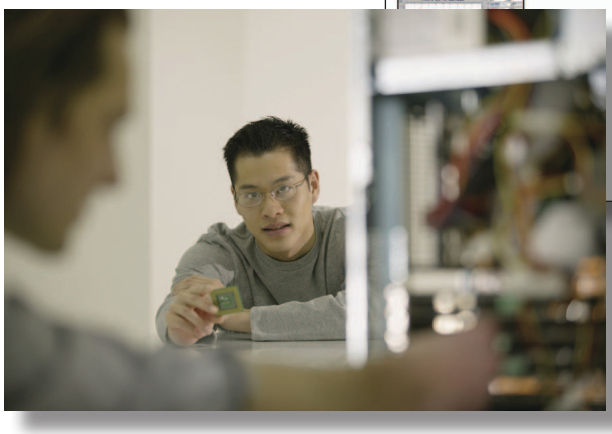

For more application note information, please visit www.fairchildsemi.com/apnotes/

Application Notes	
Application Number	**Description**
AN-1030	Design with MOSFET load switches
AN-5015	USB1T11A transceiver and specification compliance
AN-5052	Implementing the physical layer in a USB 2.0 compliant system
AN-5053	Using the FIN212/224 with a synchronous pixel interface
AN-5054	Low noise leadless packages advance portable designs
AN-5055	Portability and ultra low power TinyLogic®
AN-5058	µSerDes family frequently asked questions (FAQ)
AN-5059	LVDS technology solves typical EMI problems associated with cell phone cameras and displays
AN-5061	µSerDes layout guidelines
AN-5064	Low-I_{CCT} analog switches for ultra portable designs
AN-5066	Improve your design with adoption of high speed USB switches
AN-6011	FAN2011 family component calculation and simulation tools
AN-6019	Fairchild analog switch products ESD test methodology overview
AN-6022	Using the FSUB30 to comply with USB 2.0 fault condition requirements
AN-6031	Using SPI read and write with the µSerDes FIN324C
AN-6047	FIN324C Reset & Standby
AN-7007	Simplifying portable power management and protection circuit using the FPF200X integrated switch product family (IntelliMAX™)
AN-7525	PCB land pattern design and surface mount guidelines for MicroFET™ packages
AN-7526	Single channel MicroFET™ 3x2 power MOSFET recommended land pattern and thermal performance
AN-7527	Dual channel MicroFET™ 3x2 power MOSFET recommended land pattern and thermal performance
AN-8005	FMS6151 NoSAG/SAG applications
AN-8017	FMS6151 NoSAG/SAG applications
AN-8019	Integrated Slew Rate Controlled Switch Optimizing 1V core in Mobile Systems
AN-8020	Reliable USB Modem Design Using the Combination of an Integrated Load Switch and a Buck Converter
AN-8031	Utilizing the FSA2000 MUTE function to reduce audio "click" and "pop"
AN-8032	FSA2000 quick start guide
AN-9006	IGBT application note for camera strobe
AN-9073	High-speed USB switch layout considerations
AN-9074	Using FSA800 and FSA805 in applications with two high-speed USB ports
AN-9716	Reset timers
AN-9718	FXMA2102 I^2C Translator
AN-9720	Power path implementation tradeoffs, featuring the FAN5400 family of PWM battery charges
AN-9721	LI-ion battery charging basics, featuring the FAN5400/FAN5420 family of PWM battery chargers
MS-502	TinyLogic® introduction
MS-503	Family characteristics TinyLogic® HS/HST and UHS series
MS-545	TinyLogic® ordering information, packaging and physical dimensions

FAIRCHILD SEMICONDUCTOR®

FOR A COMPLETE LISTING OF SALES REPRESENTATIVES AND SALES OFFICES, VISIT:
www.fairchildsemi.com/cf/sales_contacts

TO RECEIVE INFORMATION ON FAIRCHILD PRODUCTS, TRADE SHOWS, ONLINE SEMINARS AND OTHER ITEMS, REGISTER HERE FOR UPDATES:
www.fairchildsemi.com/my_fairchild

For data sheets, application notes, samples and more, please visit: **www.fairchildsemi.com**

PRODUCTS | APPLICATIONS | DESIGN SUPPORT | ABOUT FAIRCHILD

POWER MANAGEMENT

Power Factor Correction
- Continuous Conduction Mode (CCM) PFC Controllers
- Critical/Boundary Conduction Mode (CrCM/BCM) PFC Controllers
- Interleaved PFC Controllers
- PFC + PWM Combination (Combo) Controllers

Off-Line and Isolated DC-DC
- AC-DC Linear Regulators
- Flyback & Forward PWM Controllers
- Flyback & Forward PWM Controllers with Integrated MOSFET
- LLC Resonant & Asymmetric Half Bridge PWM Controllers
- LLC Resonant & Asymmetric Half Bridge PWM Controllers with Integrated MOSFETs
- Primary-Side Regulation CV/CC Controllers
- Primary-Side Regulation CV/CC Controllers with Integrated MOSFET
- Standard PWM Controllers
- Supervisory/Monitor ICs
- Synchronous Rectifier Controllers

Non-Isolated DC-DC
- Charge-pump Converters
- DrMOS FET plus Driver Multi-Chip Modules
- Multi-phase Controllers
- Step-down Controllers (External Switch)
- Step-down Regulators, Non-Synchronous (Integrated Switch)
- Step-down Regulators, Synchronous (Integrated Switch)
- Step-up Regulators (Integrated Switch)

MOSFET and IGBT Gate Drivers
- 3-Phase Drivers
- Half-Bridge Drivers
- High- & Low-Side Drivers
- High-Side Drivers
- Low-Side Drivers
- Synchronous Rectifier Drivers

Voltage Regulators
- LDOs
- Positive Voltage Linear Regulators
- Negative Voltage Linear Regulators
- Shunt Regulators

Motion Control
- BLDC/PMSM Controller
- Motion-SPM™ (Smart Power Modules)
- PFC SPM® (Smart Power Modules)

Diodes & Rectifiers
- Bridge Rectifiers
- Circuit Protection & Transient Voltage Suppressors (TVS)
- Diacs
- Rectifiers
- Schottky Diodes & Rectifiers
- Small Signal Diodes
- Zener Diodes

IGBTs
- Discrete IGBTs
- Ignition IGBTs

MOSFETs
- Discrete MOSFETs
- Level-Shifted Load Switches
- MOSFET/Schottky Combos

Transistors
- BJTs
- Darlingtons
- Digital/Bias-Resistor Transistors
- JFETs
- RF Transistors
- Small Signal Transistors

Advanced Load Switches
- Advanced Current Limited Load Switches
- Slew Rate Controlled Load Switches

Battery Management
- Battery Charger ICs
- Current Sensing

Ground Fault Interrupt (GFI) Controllers

SIGNAL PATH ICs

Amplifiers & Comparators
- Comparators
- Current Sensing
- Operational Amplifiers

Audio Amplifiers
- Audio Headphone Amplifiers
- Audio Subsystems

Battery Protection ICs

Interface
- LVDS
- Serializers/Deserializers (µSerDes™)
- USB Transceivers

Signal Conditioning
- Video Filter Drivers
- Video Switch Matrix/Multiplexers

Signaling, Sensing & Timing

Switches
- Analog/Audio Switches
- Bus Switches
- Camera Switches
- Multimedia Switches
- USB Switches
- Video Switches

OPTOELECTRONICS

High Performance Optocouplers
- Low Voltage, High Performance
- High Speed Logic Gate
- High Performance Transistor
- IGBT/MOSFET Gate Driver
- Specific Function

Infrared
- Emitting Diodes
- Photo Sensors
- Reflective Sensors
- Optical Interrupt Switches

Phototransistor Optocouplers
- Isolated Error Amplifier
- Phototransistor Output - DC Sensing Input
- Phototransistor Output - AC Sensing Input
- Photo Darlington Output

Solid State Relay Optocouplers
- Solid State Relay

TRIAC Driver Optocouplers
- Random Phase TRIAC Driver
- Zero Crossing TRIAC Driver

LIGHTING ICs
- Fluorescent Lamp ICs
- HID ICs
- LED Lighting ICs
- Portable LED Drivers

LOGIC
- Buffers, Drivers, Transceivers
- Flip flops, Latches, Registers
- Gates
- MSI Functions
- Multiplexer/Demultiplexer Encoders/Decoders
- Specialty Logic
- TinyLogic®
- Voltage Level Translators

AUTOMOTIVE PRODUCTS
- Automotive Power Modules

Discrete Power
- Ignition IGBTs
- IGBTs
- N-Channel MOSFETs
- P-Channel MOSFETs
- Rectifiers

Automotive High Voltage Gate Drivers (HVICs)

Trademarks, service marks, and registered trademarks are the property of Fairchild Semiconductor or their respective owners. For a listing of Fairchild Semiconductor trademarks and related information, please see: www.fairchildsemi.com/legal
Lit. No. 920001-006 © 2011 Fairchild Semiconductor. All Rights Reserved.
Printed with soy-based inks on recycled paper.

Solutions for Your Success™