FAIRCHILD SEMICONDUCTOR®

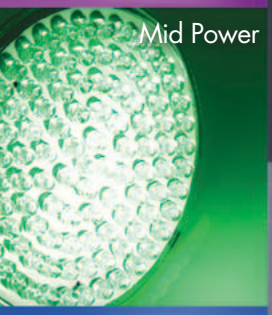

LED LIGHTING SOLUTIONS

The right topology, solutions and support for your design success.

Lighting

Core Power

MOSFETs

Today's LED lighting applications present a complex design challenge. Requirements such as input and output voltage-current parameters; safety and power efficiency regulations; thermal performance that can improve reliability and system lifetime; limited PCB space; and the need to meet time-to-market deadlines must be addressed simultaneously. Further, the range of power topology choices forces designers to manage a more complex supply chain.

To address these issues, Fairchild offers a total solution portfolio for low- (<20W), mid- (20W to 50W) and high- (>50W) LED driver applications. Our highly integrated PWM and PFC controller solutions reduce component BOM counts to enable smaller lamp sizes, eliminate design complexities, while improving overall lighting efficiency. Our new LED drivers, found on page 6, dramatically improve lighting quality, uniformity and manufacturing cost-effectiveness for a variety of dimmable designs. And we offer a wide range of discrete building blocks for LED driver applications.

Fairchild also does more to help engineers complete their designs. We offer application notes, reference designs, tutorials, evaluation boards and unequaled technical expertise from our many FAEs using our Global Power Resource℠ centers. Learn how you can simplify your LED challenges with Fairchild.

		Power Range (W)				
		1	20	50	100	1000
Applications		Low Power (<20W) Ornament/Interior Lighting Light Strip, R-Lamp Incandescent Replacement Replacement of CFL Bulb, MR Lamp and PAR Lamp	Middle Power (<50W) Indoor/Outdoor Lighting Down Light, L-Light, Flat Light, PAR Replacement, CFL Replacement, LFL Replacement	High Power (>50W) Outdoor Lighting, Street Light, Floodlight HID Floodlight Replacement HID Street Light Replacement		
Solutions		**Non Isolation PFC Buck**	**PSR and PSR PFC Flyback**	**Single Stage PFC Flyback**	**CRM PFC + QR Flyback**	**CRM PFC + LLC Half Bridge**
Product Number	Controller IC	FL7701 (SOIC-8)	FL103 (SOIC-8) FL7730 (SOIC-8) FL7732 (SOIC-8)	FL6961 (SOIC-8) FL7930B/FL7930C (SOIC-8)	FL6300A (SOIC-8) FL6961 (SOIC-8) FL7930B/FL7930C (SOIC-8)	FL7930B/FL7930C (SOIC-8) FAN7621S (SOIC-16) FAN7346 (SOIC-28)
	Controller IC with Integrated MOSFET		FSEZ1317NY (DIP-7) FSEZ1317MY (SOIC-7)			FLS1600/1700/1800/2100XS (SIP-9)

TABLE OF CONTENTS

PSR FLYBACK SOLUTIONS FOR LOW POWER (<20W) 5-6

PSR FLYBACK AND PSR PFC PWM CONTROLLERS 6

POWER MOSFETs FOR PSR FLYBACK 6

CRM PFC SINGLE STAGE FLYBACK SOLUTIONS FOR MID POWER (<50W) 7

SINGLE STAGE FLYBACK AND BOUNDARY MODE PFC CONTROLLER 7

POWER MOSFETs FOR SINGLE STAGE FLYBACK 7

CRM PFC + QR FLYBACK SOLUTIONS FOR HIGH POWER (>50W) 8-9

POWER MOSFETs FOR PFC 8

BOUNDARY MODE PFC CONTROLLER 9

QUASI-RESONANT CURRENT MODE PWM CONTROLLER 9

POWER MOSFETs FOR QR FLYBACK 9

CRM PFC + LLC HALF-BRIDGE SOLUTIONS FOR HIGH POWER (>50W) 10-11

LLC HALF-BRIDGE RESONANT CONTROLLER 10

LED CURRENT CONTROLLER 10

POWER MOSFET FOR LLC HALF BRIDGE 11

MOSFETs, PHOTOTRANSISTORS, DIODES AND RECTIFIERS 12

EVALUATION BOARDS AND REFERENCE DESIGN INFORMATION 13-14

For low-power applications, the major challenges include space and cost restrictions as well as the need to improve light radiation and conserve energy. Our primary side, regulated PWM controllers—such as the FL7730 and FL7732—have been engineered to deliver superior light quality, greater operating efficiency, and significant size and cost savings.

Each controller features a multi-chip package with MOSFET built in, as well as our TRUECURRENT™ and proprietary linear predict method technologies. Together, they deliver best-in-class constant current and constant voltage operation.

Design advantages include:

- +80% efficiency from green-mode PWM technology, low start-up and operating current
- No input electrolytic capacitor needed
- No secondary feedback current required
- Improved light quality and ability to accommodate different numbers of LED units in a string due to CV/CC regulation
- Reduced PCB size
- Lower solution cost
- High voltage start-up
- Various protection modes for enhanced safety

Note: Fairchild's dimmable LED drivers improve light quality and life expectancy while eliminating capacitors, transformers and rectifiers, thus reducing the size and cost of your design.

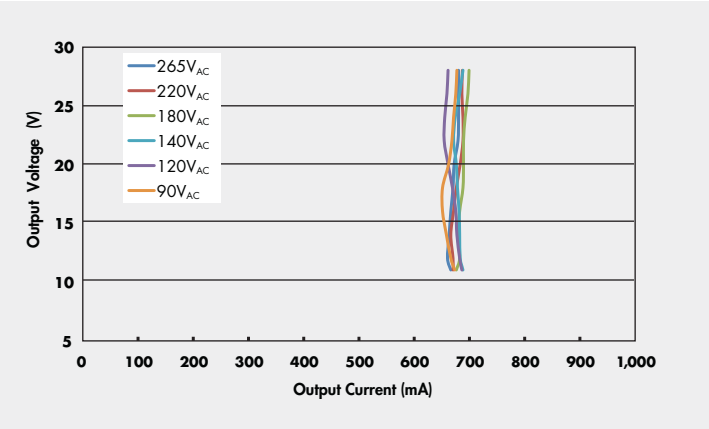

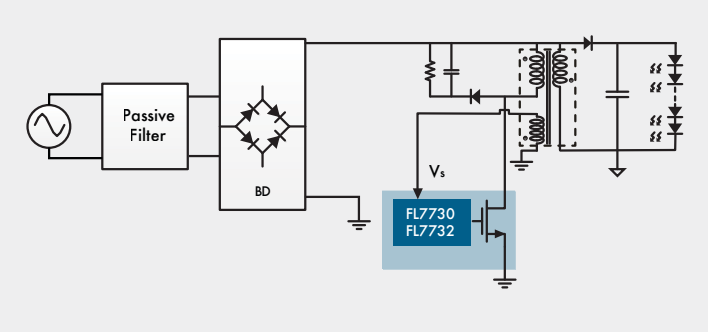

PSR PFC FLYBACK SOLUTIONS FOR LOW POWER (<20W)

PSR and PSR PFC Flyback/Non Isolation Buck PWM Controllers

Product Number	Topology	PFC	Dimming	CC Variance (%)	Frequency (kHz)	Internal MOSFET		Package
						Yes/No	$R_{DS(ON)}$ (Ω)	
FL7701	Non Isolation PFC Buck	Yes	Yes	5	Variable	No		SOIC-8
FL7730	PSR PFC Flyback	Yes	Yes	5	22~66	No		SOIC-8
FL7732	PSR PFC Flyback	Yes	No	5	22~66	No		SOIC-8
FL103	PSR Flyback	No	No	5	50	No		SOIC-8
FSEZ1317MY	PSR Flyback	No	No	7	50	Yes	16	SOIC-7
FSEZ1317NY	PSR Flyback	No	No	7	50	Yes	16	DIP-7

For additional design resources, application notes AN-9735, AN-9741, AN-9744, AN-9745 and AN-9750 can be found at:
www.fairchildsemi.com/applications/lighting/led/index.html

High Voltage MOSFETs for PSR Flyback

Product Number	BV_{DSS} Min. (V)	$R_{DS(ON)}$ Max. @ V_{GS} =10V (Ω)	Qg Typ. @ V_{GS} =10V (nC)	I_D (A)	P_D (W)	Package
FDD7N60NZ	600	1.25	13	6.5	90	TO-252 (DPAK)
FDD5N60NZ	600	2.0	11	4	83	TO-252 (DPAK)
FDD4N60NZ*	600	2.5	10	3.5	73.5	TO-252 (DPAK)
FQU5N60C	600	2.5	15	2.8	49	TO-251 (IPAK)
FQD2N60C / FQU2N60C	600	4.7	8.5	1.9	44	TO-252 (DPAK) / TO-251 (IPAK)
FQD1N60C / FQU1N60C	600	11.5	4.8	1	28	TO-252 (DPAK) / TO-251 (IPAK)
FQN1N60C	600	11.5	4.8	0.3	1	TO-92
FQD2N80	800	6.3	12	1.8	50	TO-252 (DPAK)
FQD1N80	800	20.0	5.5	1	45	TO-252 (DPAK)
FQU2N90TU_AM002	900	7.2	12	1.7	2.5	TO-251 (IPAK)
FQD2N90	900	7.2	12	1.7	50	TO-252 (DPAK)
FQD2N100 / FQU2N100	1000	9.0	12	1.6	2.5	TO-252 (DPAK) / TO-251 (IPAK)

** In development*
For a complete list of components, package availability and design resources, visit www.fairchildsemi.com/applications/lighting/led/index.html

CRM PFC SINGLE STAGE FLYBACK SOLUTIONS FOR MID POWER (<50W)

For mid-power applications such as down lights and L-Lights, designs typically start with a requirement for high PF, reduced board space, and the ever-increasing demand for greater energy savings. Fairchild's CRM PFC PWM controllers—FL6961 and FL7930B/C—address these concerns.

Fairchild's LED solutions deliver the PF performance that energy regulations require, while eliminating multiple components and the performance limitations of older topologies.

Design advantages include:

- High PF (>0.9) with low THD for higher efficiency and reliability
- No electrolytic capacitor needed
- No input voltage sensing
- Advanced current type error amp
- Over voltage protection (OVP)
- Fewer components, smaller PCB size

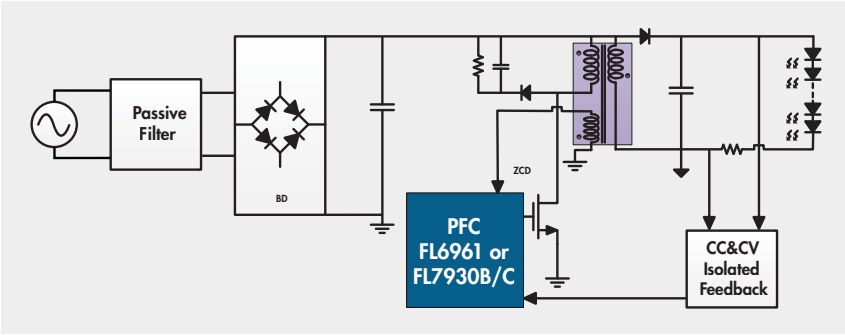

Single Stage Flyback Topology

Single Stage Flyback Boundary Mode PFC Controller						
Product Number	**PFC**	**Soft Start**	**2nd OVP**	**PFC Ready**	**Control Mode**	**Package**
FL6961	Yes	No	No	No	Current	SOIC-8
FL7930B	Yes	Yes	Yes	No	Current	SOIC-8
FL7930C	Yes	Yes	No	Yes	Current	SOIC-8

For additional design resources, application notes AN-9731, AN-9732 and AN-9737 can be found at: www.fairchildsemi.com/applications/lighting/led/index.html

High Voltage MOSFETs for Single Flyback						
Product Number	**BV_{DSS} Min. (V)**	**$R_{DS(ON)}$ Max. (Ω) @ V_{GS} =10V**	**Qg Typ. (nC) @V_{GS} =10V**	**I_D (A)**	**P_D (W)**	**Package**
FDD4N60NZ*	600	2.5	10	3.5	73.5	TO-252 (DPAK)
FDD5N60NZ	600	2	11	4	83	TO-252 (DPAK)
FDD7N60NZ / FDU7N60NZ	600	1.25	13	6.5	90	TO-252 (DPAK) / TO-251 (IPAK)
FDP5N60NZ / FDPF5N60NZ	600	2	10	4.5	100 / 33	TO-220 / TO-220F
FDP7N60NZ / FDPF7N60NZ	600	1.25	13	6.5	147 / 33	TO-220 TO-220F
FDPF4N60NZ*	600	2.5	10	3.5	30	TO-220F
FQP2N60C / FQPF2N60C	600	4.7	8.5	2	54 / 23	TO-220 / TO-220F
FQP3N60C	600	3.4	10.5	3	75	TO-220
FQPF7N65C	650	1.4	28	7	52	TO-220F
FQP3N80C / FQPF3N80C	800	4.8	13	3	107 / 39	TO-220 / TO-220F
FQP6N80C / FQPF6N80C	800	2.5	21	5.5	158 / 51	TO-220 / TO-220F
FQP7N80C / FQPF7N80C	800	1.9	27	6.6	167 / 56	TO-220 / TO-220F
FQP8N80C / FQPF8N80C	800	1.55	35	8	178 / 59	TO-220 / TO-220F
FQP4N90C / FQPF4N90C	900	4.2	17	4	140 / 47	TO-220 / TO-220F
FQP6N90C / FQPF6N90C	900	2.3	30	6	167 / 56	TO-220 / TO-220F
FQP8N90C / FQPF8N90C	900	1.9	35	6	170 / 60	TO-220 / TO-220F
FQPF9N90C	900	1.4	45	8	68	TO-220F

** In development*
For a complete list of components, package availability and design resources, visit www.fairchildsemi.com/applications/lighting/led/index.html

CRM PFC + QR FLYBACK SOLUTIONS FOR HIGH POWER (>50W)

When designing for street light, wall washing and industrial light applications, the major concerns are high system efficiency, reliability, as well as containing the BOM count and cost. By combining Fairchild's PWM controllers—such as the FL6961 or FL7930B/C—with our QR flyback technology, such as the FL6300A—you have an ideal design solution for high-power applications.

Our QR controllers provide higher efficiency through extended valley switching while further reducing space by integrating SenseFET or MOSFET functionality inside. Furthermore, all the size and efficiency advantages already cited on our CRM PFC controllers also apply.

Design advantages include:

- >92% efficiency and greater reliability from extended valley switching, high PF, low THD and Green-Mode performance
- Multiple protection features
- Reduced part count, PCB size and solution cost from integration, elimination of electrolytic capacitor

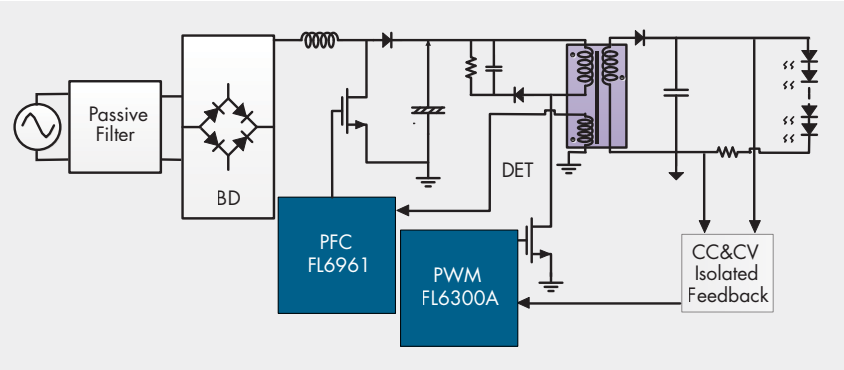

CRM PFC + QR Flyback

High Voltage MOSFETs for PFC

Product Number	BV_{DSS} Min. (V)	$R_{DS(ON)}$ Max. (Ω) @ V_{GS} =10V	Qg Typ. (nC) @ V_{GS} =10V	I_D (A)	P_D (W)	Package
FDP22N50N	500	0.220	49	22	312.5	TO-220
FDP18N50 / FDPF18N50	500	0.265	45	18	235 / 58	TO-220 / TO-220F
FDPF16N50	500	0.380	32	16	52	TO-220F
FDP12N50NZ / FDPF12N50NZ	500	0.520	23	11.5	170 / 42	TO-220 / TO-220F
FDD8N50NZ	500	0.850	14	6.5	90	TO-252 (DPAK)
FDP8N50NZ / FDPF8N50NZ	500	0.850	14	8	139 / 40.3	TO-220 / TO-220F
FDPF5N50T	500	1.400	11	5	28	TO-220F
FDP5N50NZ / FDPF5N50NZ	500	1.500	9	4.5	78 / 30	TO-220 / TO-220F
FCP22N60N / FCPF22N60NT	600	0.165	45	22	205 / 39	TO-220 / TO-220F
FCP16N60N / FCPF16N60NT	600	0.199	40.2	16	134.4 / 35.7	TO-220 / TO-220F
FCP13N60N / FCPF13N60NT	600	0.258	30.4	13	116 / 33.8	TO-220 / TO-220F
FCP11N60N / FCPF11N60NT	600	0.299	27.4	10.8	94 / 32.1	TO-220 / TO-220F
FDPF17N60NT	600	0.340	48	17	62.5	TO-220F
FCP9N60N / FCPF9N60NT	600	0.385	22	9	83.3 / 29.8	TO-220 / TO-220F
FCPF7N60NT	600	0.520	17.8	6.8	30.5	TO-220F
FCP7N60 / FCPF7N60	600	0.600	25	7	83 / 31	TO-220 / TO-220F
FDP12N60NZ / FDPF12N60NZ	600	0.650	26	12	240 / 39	TO-220 / TO-220F
FDP10N60NZ / FDPF10N60NZ	600	0.750	23	10	185 / 38	TO-220
FCD5N60	600	0.950	16	4.6	54	TO-252 (DPAK)
FDP7N60NZ / FDPF7N60NZ	600	1.250	13	6.5	147 / 33	TO-220 / TO-220F
FDP5N60NZ / FDPF5N60NZ	600	2.000	10	4.5	100 / 33	TO-220 / TO-220F
FDPF15N65	650	0.440	48.5	7	73.5	TO-220F
FQPF7N65C	650	1.400	28	7	52	TO-220F

For a complete list of components, package availability and design resources, visit www.fairchildsemi.com/applications/lighting/led/index.html

Boundary Mode PFC Controller

Product Number	PFC	Soft Start	2nd OVP	PFC Ready	Control Mode	Package
FL6961	Yes	No	No	No	Current	SOIC-8
FL7930B	Yes	Yes	Yes	No	Current	SOIC-8
FL7930C	Yes	Yes	No	Yes	Current	SOIC-8

Quasi-Resonant Flyback PWM Controller

Product Number	Soft Start	Switching Frequency	Feedback Mode	Protection	Package
FL6300A	Yes	QRC	Current	OLP, OCP, OVP, TSD	SOIC-8

For additional design resources, application notes AN-9731, AN-9732, AN-9736 and AN-9737 can be found at: www.fairchildsemi.com/applications/lighting/led/index.html

High Voltage MOSFETs for QR Flyback

Product Number	BV_{DSS} Min. (V)	$R_{DS(ON)}$ Max. (Ω) @ V_{GS} =10V	Qg Typ. (nC) @ V_{GS} =10V	I_D (A)	P_D (W)	Package
FDPF17N60NT	600	0.340	48	17	62.5	TO-220F
FCD9N60NTM	600	0.385	17.8	9	92.6	TO-252 (DPAK)
FCP9N60N / FCPF9N60NT	600	0.385	22	9	83.3 / 29.8	TO-220 / TO-220F
FCPF7N60NT	600	0.520	17.8	6.8	30.5	TO-220F
FCD7N60	600	0.600	23	7	83	TO-252 (DPAK)
FCP7N60 / FCPF7N60	600	0.600	25	7	83 / 31	TO-220 / TO-220F
FDP12N60NZ / FDPF12N60NZ	600	0.650	26	12	240 / 39	TO-220 / TO-220F
FDP10N60NZ / FDPF10N60NZ	600	0.750	23	10	185 / 38	TO-220 / TO-220F
FCD5N60	600	0.950	16	4.6	54	TO-252 (DPAK)
FQPF7N60	600	1.000	29	4.3	48	TO-220F
FCP4N60	600	1.200	12.8	3.9	50	TO-220
FDD7N60NZ	600	1.250	13	6.5	90	TO-252 (DPAK)
FDP7N60NZ / FDPF7N60NZ	600	1.250	13	6.5	147 / 33	TO-220 / TO-220F
FDD5N60NZ	600	2.000	11	4	83	TO-252 (DPAK)
FDP5N60NZ / FDPF5N60NZ	600	2.000	10	4.5	100 / 33	TO-220 / TO-220F
FDPF15N65	650	0.440	48.5	7	73.5	TO-220F
FQPF7N65C	650	1.400	28	7	52	TO-220F
FQP8N80C / FQPF8N80C	800	1.550	35	8	178 / 59	TO-220 / TO-220F
FQP7N80C / FQPF7N80C	800	1.900	27	6.6	167 / 56	TO-220 / TO-220F
FQP6N80C / FQPF6N80C	800	2.500	21	5.5	158 / 51	TO-220 / TO-220F
FQP9N90C / FQPF9N90C	900	1.400	45	8	205 / 68	TO-220 / TO-220F
FQP8N90C / FQPF8N90C	900	1.900	35	6	170 / 60	TO-220 / TO-220F
FQP6N90C / FQPF6N90C	900	2.300	30	6	167 / 56	TO-220 / TO-220F

For a complete list of components, package availability and design resources, visit www.fairchildsemi.com/applications/lighting/led/index.html

CRM PFC + LLC HALF-BRIDGE SOLUTIONS FOR HIGH POWER (>50W)

For LED designs in the higher power range, the BOM count, cost and efficiency continue to be a challenge. But often design complexity and system reliability are pressing issues as well. Fairchild has leveraged our extensive power supply IP for a combined CRM PFC and LLC half-bridge topology that meets these design challenges.

Our FLS-xxxxXS series of controllers combines a PWM, for half-bridge resonant converters, with two highly integrated power switches, optimized for half-bridge LLC control into a single package. When used in conjunction with one of our CRM PFC controllers, you'll eliminate dozens of components while significantly improving system efficiency and reliability.

Design advantages include:

- >92% efficiency from extended valley switching, ZVS design and green-mode operation
- Elimination of up to 86 components, lower BOM, lower costs
- Up to 300kHz operating frequency
- Pulse skipping for frequency limiting operation under light load conditions

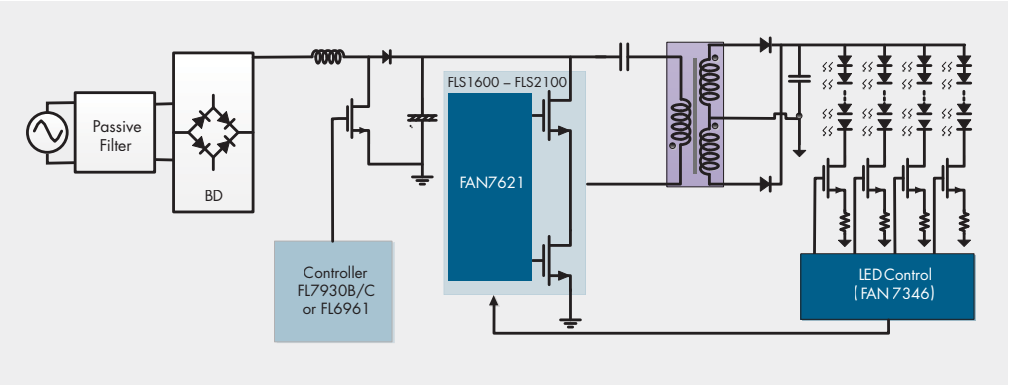

CRM PFC + LLC Half-Bridge

LLC Half-Bridge Resonant Controller								
Product Number	Max. P_O (W) Rating	Soft Start	Switching Frequency (kHz)	Feedback Mode	Internal MOSFET		Protection	Package
					Yes/No	$R_{DS(ON)}$ (Ω)		
FAN7621	–	Yes	300	Current	No	–	OLP, OVP, OCP, AOCP, TSD	SOIC-16
FLS1600XS	160	Yes	300	Current	Yes	1.55		SIP-9
FLS1700XS	200	Yes	300	Current	Yes	1.25		SIP-9
FLS1800XS	260	Yes	300	Current	Yes	0.95		SIP-9
FLS2100XS	400	Yes	300	Current	Yes	0.51		SIP-9

LED Current Controller							
Product Number	Channel Number	V_{OUT} (V)	Dimming	Soft Start	Protection	Control Mode	Package
FAN7346	4	100	Analog/ PWM	No	SLP, OVR, OLP, OCP, TSD	Linear Current	SOIC-28

For additional design resources, application notes AN-9729, AN-9730, and AN-9738 can be found at: www.fairchildsemi.com/applications/lighting/led/index.html

High Voltage MOSFETs for LLC Half Bridge

Product Number	BV_{DSS} Min. (V)	$R_{DS(ON)}$ Max. (Ω) @ V_{GS} =10V	Qg Typ. (nC) @ V_{GS} =10V	I_D (A)	P_D (W)	Package
FDP22N50N	500	0.220	49	22	312.5	TO-220
FDP20N50F / FDPF20N50FT*	500	0.260	50	20	250 / 38.5	TO-220 / TO-220F
FDP18N50 / FDPF18N50	500	0.265	45	18	235 / 58	TO-220 / TO-220F
FDPF16N50	500	0.380	32	16	52	TO-220F
FDP12N50NZ / FDPF12N50NZ	500	0.520	23	11.5	170 / 42	TO-220 / TO-220F
FDPF13N50FT*	500	0.540	30	12	42	TO-220F
FDPF12N50T	500	0.650	22	11.5	42	TO-220F
FDP8N50NZ / FDPF8N50NZ	500	0.850	14	8	139 / 40.3	TO-220 / TO-220F
FDPF10N50FT*	500	0.850	18	9	42	TO-220F
FQPF9N50CF*	500	0.850	28	9	44	TO-220F
FDPF8N50NZF*	500	1.000	14	7	40	TO-220F
FDPF10N50UT*	500	1.050	18	8	42	TO-220F
FDD6N50F*	500	1.150	15	5.5	89	TO-252 (DPAK)
FDPF8N50NZU*	500	1.200	14	6.5	40	TO-220F
FCP22N60N / FCPF22N60NT	600	0.165	45	22	205 / 39	TO-220 / TO-220F
FCP16N60N / FCPF16N60NT	600	0.199	40.2	16	134.4 / 35.7	TO-220 / TO-220F
FCP13N60N / FCPF13N60NT	600	0.258	30.4	13	116 / 33.8	TO-220 / TO-220F
FCP11N60N / FCPF11N60NT	600	0.299	27.4	10.8	94 / 32.1	TO-220 / TO-220F
FDPF17N60NT	600	0.340	48	17	62.5	TO-220F
FCP9N60N / FCPF9N60NT	600	0.385	22	9	83.3 / 29.8	TO-220 / TO-220F
FCPF7N60NT	600	0.520	17.8	6.8	30.5	TO-220F
FCP7N60 / FCPF7N60	600	0.600	25	7	83 / 31	TO-220 / TO-220F
FDP12N60NZ / FDPF12N60NZ	600	0.650	26	12	240 / 39	TO-220 / TO-220F
FDP10N60NZ / FDPF10N60NZ	600	0.750	23	10	185 / 38	TO-220 / TO-220F
FDPF10N60ZUT*	600	0.800	31	9	42	TO-220F
FCD5N60	600	0.950	16	4.6	54	TO-252 (DPAK)
FQPF7N60	600	1.000	29	4.3	48	TO-220F
FDD7N60NZ	600	1.250	13	6.5	90	TO-252 (DPAK)

** Suffixes F and U mean Fast recovery and Ultra fast recovery MOSFET.*
For a complete list of components, package availability and design resources, visit www.fairchildsemi.com/applications/lighting/led/index.html

MOSFETs (Low-, Mid- and High-Voltage)

For a complete component selection and package availability visit:

www.fairchildsemi.com/tree/power-management/mosfets/discrete-mosfets/

Phototransistor Output-DC Sensing Input

For a complete component selection and package availability visit:

www.fairchildsemi.com/tree/optoelectronics/phototransistor-optocouplers/phototransistor-output-dc-sensing-input/

Diodes

For a complete component selection and package availability visit:

www.fairchildsemi.com/tree/power-management/diodes-and-rectifiers/rectifiers/

Bridge Rectifiers

For complete component selection and package availability visit:

www.fairchildsemi.com/tree/power-management/diodes-and-rectifiers/bridge-rectifiers/

Low-Power Solutions (<20W)

Reference Designs/ Evaluation Boards	Controller(s) Featured	P_{OUT} (W)	Out V/A	Dimensions (mm)	Specifications
RD-L020-1/ FEB_L020-1	FL7730 + External MOSFET	8.4	22/0.38	62.5 (L) x 26.8 (W) x 12.0 (H)	CC Variance: < ± 5% (Low Input) Efficiency: >83% (Low Input) Max Temp.: <60°C (Rectifier/Low Input) PF: >0.95 THD: Meet Class C EMI Margin: >5dB (EN55022) Protection: OVP, SCP, OCP (Auto Restart)
RD-L020-2/ FEB_L020-2	FL7730 + External MOSFET	8.4	22/0.38	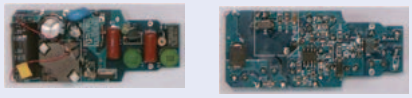 62.5 (L) x 26.8 (W) x 12.0 (H)	CC Variance: < ± 5% (High Input) Efficiency: >84.5% (High Input) Max Temp.: <55°C (Rectifier/High Input) PF: >0.92 THD: Meet Class C EMI Margin: >5dB (EN55022) Protection: OVP, SCP, OCP (Auto Restart)
RD-L025/ FEB_L025	FL7732 + External MOSFET	8.4	24/0.35	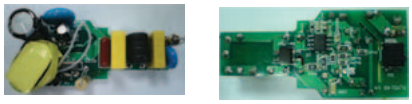 58.0 (L) x 26.5 (W) x 18.0 (H)	CC Variance: < ± 5% (Universal Input) Efficiency: >87.6% (Universal Input) Max Temp.: <60°C (Rectifier/Universal) PF: >0.90 THD: Meet Class C EMI Margin: >5dB (EN55022) Protection: OVP, SCP, OCP (Auto Restart)
RD-L026/ FEB_L026	FL7732 + External MOSFET	16.8	24/0.7	79.0 (L) x 30.0 (W) x 20.0 (H)	CC Variance: < ± 5% (Universal Input) Efficiency: >89% (Universal Input) Max Temp.: <70°C (Rectifier/Universal) PF: >0.90 THD: Meet Class C (<20%) EMI Margin: >5dB (EN55022) Protection: OVP, SCP, OCP (Auto Restart)
RD-L030/ FEB_L030	FL7701 + External MOSFET	2.52	28.28/0.1	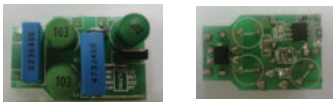 20.0 (L) x 32.0 (W) x 13.0 (H)	CC Variance: < ± 5% (Universal Input) Efficiency: > 85% (Universal Input) Max Temp.: <71.5°C (IC/Universal) PF: >0.88 THD: Meet Class C EMI Margin: <5dB (EN55022) Protection: OVP, SCP, OCP (Auto Restart)
RD-L031-2/ FEB_L031-2	FL7701 + External MOSFET	7.55	31.56/0.26	28.0 (L) x 52.0 (W) x 18.0 (H)	CC Variance: < ± 5% (High Line) Efficiency: >86% (Universal Input) Max Temp.: <65°C (MOSFET/240V_{AC}) PF: >0.93 THD: Meet Class C EMI Margin: <5dB (EN55022) Protection: OVP, SCP, OCP (Auto Restart)
RD-L006/ FEB-L006	FSEZ1317MY (SOP-7)	4.2	12/0.35	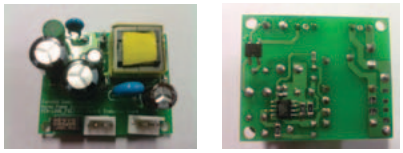 45 (L) x 37 (W)	CC Variance: < ± 5% (Universal Input) Efficiency: >80% (Universal Input) Max Temp.: <56°C (Rectifier/Universal) EMI Margin: >10dB (EN55022) Min. P_{IN}: <30mW (Min. Load) Max. V_{OUT}: <16.15V (Min. Load) Start-Up Time: <129mS (Universal Input) Protection: OVP, SCP (Auto Restart)
RD-L007/ FEB-L007	FSEZ1317MY (DIP-7)	6	20/0.30	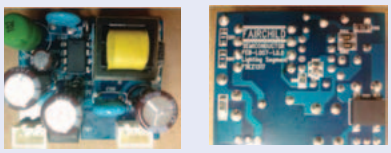 45 (L) x 37 (W)	CC Variance: < ± 5% (Universal Input) Efficiency: >80% (Universal Input) Max Temp.: <65.3°C (IC/Universal) EMI Margin: >10dB (EN55022) Min. P_{IN}: <161mW (Min. Load) Max. V_{OUT}: <24.44V (Min. Load) Start-Up Time: <128mS (Universal Input) Protection: OVP, SCP (Auto Restart)
RD-L015/ FEB-L015	FL103 + External MOSFET	8.4	24/0.35	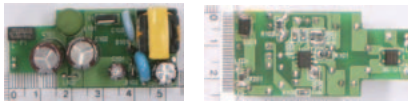 53 (L) x 25 (W) Neck: 15 x 15	CC Variance: < ± 5% (Universal Input) Efficiency: >85% (Universal Input) Max Temp.: <60°C (2'nd Rectifier/Universal) EMI margin: >7dBuV (EN55022) Min. P_{IN}: <101mW (Open Load) Max. V_{OUT}: <26.7V (Open Load) Start-Up Time: <213ms (Universal Input) Protection: SCP (Auto Restart)

Mid-Power Solutions (<50W)

Reference Designs/ Evaluation Boards	Controller(s) Featured	P_{OUT} (W)	Out V/A	Dimensions (mm)	Specifications
RD-L009/ FEB-L009	FL6961 + External MOSFET	16.8	24/0.70	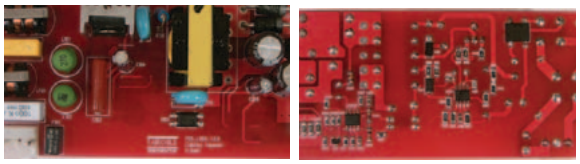 110 (L) x 50 (W)	CC Variance: < ±5% (Universal Input) Efficiency: >78% (Universal Input) PF: >0.92 (Universal Input) THD: Meet Class C EMI Margin: >5dB (EN55022) Protection: OVP, SCP, OCP (Auto Restart)
RD-L010/ FEB-L010	FL6961 + External MOSFET	30	24/1.25	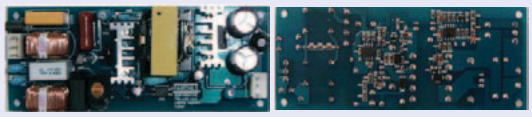 125 (L) x 50 (W)	CC Variance: < ±5% (Universal Input) Efficiency: >84% (Universal Input) PF: >0.91 (Universal Input) THD: Meet Class C EMI Margin: >5dB (EN55022) Protection: OVP, SCP, OCP (Auto Restart)

High-Power Solutions (>50W)

Reference Designs/ Evaluation Boards	Controller(s) Featured	P_{OUT} (W)	Out V/A	Dimensions (mm)	Specifications
RD-L008/ FEB-L008	FL6961 + FL6300A + External MOSFETs	70	24/2.9	183 (L) x 51 (W)	CC Variance: < ±5% (Universal Input) Efficiency: >83% (Universal Input) PF: >0.90 (Universal Input) THD: Meet Class C EMI Margin: >5dB (EN55022) Protection: OVP, SCP, OCP (Auto Restart)
RD-L011/ FEB-L011 RD-L012/ FEB-L012	FL7930B + FLS1800XS (100W) FLS2100XS (160W) + FAN7346 (4Ch. Only)	100 160	100/0.25 (4Ch.) 1A (1Ch.) 115/0.34 (4Ch.) 1.36A (1Ch.)	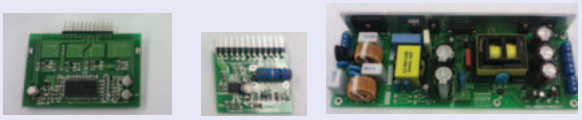 230 (L) x 80 (W) x 35 (H)	CC Variance: < ±5% (Universal Input) Efficiency: >92% (Universal Input) PF: >0.90 (Universal Input) THD: Meet Class C EMI Margin: >5dB (EN55022) Protection: OVP, SCP, OCP (Auto Restart)
RD-L013/ FEB-L013	FL7930B + FAN7621S + External MOSFETs	150	103/1.48 (1Ch.)	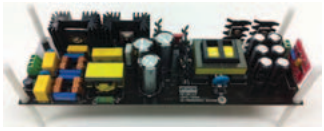 240 (L) x 80 (W) x 50 (H)	CC Variance: < ± 5% (Universal Input) Efficiency: >90% (Universal Input) PF: >0.90 (Universal Input) THD: Meet Class C EMI Margin: >5dB (EN55022) Protection: OVP, SCP, OCP (Auto Restart)

Notes:
1) To request an Evaluation Board, contact your local sales representative.
2) For complete LED Lighting design tools and support including application notes, reference designs, white papers and a complete listing of Fairchild's Global Power Resource℠ Centers visit: www.fairchildsemi.com/applications/lighting/led/index.html

FAIRCHILD SEMICONDUCTOR®

FOR A COMPLETE LISTING OF SALES REPRESENTATIVES AND SALES OFFICES, VISIT:
www.fairchildsemi.com/cf/sales_contacts

FOR INFORMATION ON FAIRCHILD PRODUCTS, TRADESHOWS, SEMINARS AND OTHER ITEMS, REGISTER HERE:
www.fairchildsemi.com/my_fairchild

For datasheets, application notes, samples and more, please visit: **www.fairchildsemi.com**

PRODUCTS | APPLICATIONS | DESIGN SUPPORT | ABOUT FAIRCHILD

POWER MANAGEMENT

Power Factor Correction
- Continuous Conduction Mode (CCM) PFC Controllers
- Critical/Boundary Conduction Mode (CrCM/BCM) PFC Controllers
- Interleaved PFC Controllers
- PFC + PWM Combination (Combo) Controllers

Off-Line and Isolated DC-DC
- AC-DC Linear Regulators
- Flyback & Forward PWM Controllers
- Flyback & Forward PWM Controllers with Integrated MOSFET
- LLC Resonant & Asymmetric Half Bridge PWM Controllers
- LLC Resonant & Asymmetric Half Bridge PWM Controllers with Integrated MOSFETs
- Primary-Side Regulation CV/CC Controllers
- Primary-Side Regulation CV/CC Controllers with Integrated MOSFET
- Standard PWM Controllers
- Supervisory/Monitor ICs
- Synchronous Rectifier Controllers

Non-Isolated DC-DC
- Charge-pump Converters
- DrMOS FET plus Driver Multi-Chip Modules
- Step-down Controllers (External Switch)
- Step-down Regulators, Non-Synchronous (Integrated Switch)
- Step-down Regulators, Synchronous (Integrated Switch)
- Step-up Regulators (Integrated Switch)

MOSFET and IGBT Gate Drivers
- 3-Phase Drivers
- Half-Bridge Drivers
- High- & Low-Side Drivers
- High-Side Drivers
- Low-Side Drivers

Voltage Regulators
- LDOs
- Positive Voltage Linear Regulators
- Negative Voltage Linear Regulators
- Shunt Regulators
- Voltage Detector
- Voltage Stabilizer
- Voltage to Frequency Converter

Motion Control
- BLDC/PMSM Controller
- Motion-SPM™ (Smart Power Modules)
- PFC SPM® (Smart Power Modules)

Diodes & Rectifiers
- Bridge Rectifiers
- Circuit Protection & Transient Voltage Suppressors (TVS)
- Diacs
- Rectifiers
- Schottky Diodes & Rectifiers
- Small Signal Diodes
- Zener Diodes

IGBTs
- Discrete IGBTs
- Ignition IGBTs

MOSFETs
- Discrete MOSFETs
- Level-Shifted Load Switches
- MOSFET/Schottky Combos

Transistors
- BJTs
- Darlingtons
- Digital/Bias-Resistor Transistors
- JFETs
- RF Transistors
- Small Signal Transistors

Advanced Load Switches
- Advanced Current Limited Load Switches
- Slew Rate Controlled Load Switches

Battery Management
- Battery Charger ICs

Ground Fault Interrupt
- Ground Fault Interrupt (GFI) Controllers

Backlight Unit (BLU)
- CCFL Inverter ICs

SIGNAL PATH ICs

Amplifiers & Comparators
- Comparators
- Operational Amplifiers

Audio Amplifiers
- Audio Subsystems
- Audio Headphone Amplifiers
- Digital Microphone Amplifiers

Battery Protection ICs
- Battery Protection ICs

Interface
- LVDS
- Serializers/Deserializers (µSerDes™)
- USB Transceivers

Signal Conditioning
- Video Filter Drivers
- Video Switch Matrix/Multiplexers

Signaling, Sensing & Timing
- Signaling, Sensing & Timing
- Timing

Switches
- Accessory Switches
- Analog Switches
- Audio Jack Detection Switches
- Audio Switches
- Bus Switches
- MIPI Switches
- Multimedia Switches
- USB Switches
- Video Switches

LOGIC

Buffers, Drivers, Transcievers
- Buffers
- Line Drivers
- Transceivers

Flip Flops, Latches, Registers
- Counters
- Flip Flops
- Inverters
- Latches
- Registers

Gates
- AND Gates
- NAND Gates
- OR Gates
- NOR Gates
- Schmitt Triggers
- Configurable Gates

Multiplexer / Demultiplexer / Decoders
- Decoders
- Demultiplexers
- Multiplexers
- Multivibrators

Voltage Level Translators
- Voltage Level Translators

LIGHTING ICs
- Fluorescent Lamp ICs
- HID ICs
- LED Lighting ICs
- Portable LED Drivers

OPTOELECTRONICS

High Performance Optocouplers
- Low Voltage, High Performance
- High Speed Logic Gate
- High Performance Transistor
- IGBT/MOSFET Gate Driver
- Specific Function

Infrared
- Emitting Diodes
- Photo Sensors
- Photo Sensor – Transistors
- Ambient Light Sensors
- Reflective Sensors
- Optical Interrupt Switches

Phototransistor Optocouplers
- Isolated Error Amplifier
- Phototransistor Output - DC Sensing Input
- Phototransistor Output - AC Sensing Input
- Photo Darlington Output

TRIAC Driver Optocouplers
- Random Phase TRIAC Driver
- Zero Crossing TRIAC Driver

AUTOMOTIVE PRODUCTS

Automotive Discrete Power
- Automotive Ignition IGBTs
- Automotive IGBTs
- Automotive N-Channel MOSFETs
- Automotive P-Channel MOSFETs
- Automotive Rectifiers

Automotive High Voltage Gate Drivers (HVICs)
- Automotive High Voltage Gate Drivers (HVICs)

High Side Smart Switches
- High Side Smart Switches

Trademarks, service marks, and registered trademarks are the property of Fairchild Semiconductor or their respective owners. For a listing of Fairchild Semiconductor trademarks and related information, please see: www.fairchildsemi.com/legal
Lit. No. 980010-003 © 2012 Fairchild Semiconductor. All Rights Reserved.

Solutions for Your Success™